Two-Step Pneumatic Diaphragm Valves

DPT Series

Introduction

DPT series two-step pneumatic diaphragm valves, designed for high purity and ultra high purity applications, provide a "soft start" for equipment by rapidly switching between low and high flow modes. This prevents pressure surges in the cavity and avoids scattering of particles that could contaminate the process equipment cavity as a result of the rapid flow of media into the process equipment cavity.

Features

- ◎ Fast switching between low and high flow rates
- ◎ Minimal particle generation and minimal dead space
- ◎ Cobalt alloy diaphragm with high strength and corrosion resistance to ensure long cycle life
- ◎ No internally wetted threads or springs which minimizes particle generation and particle entrapment for high purity
- ◎ Valve Cv values in low-flow mode can be preset at the factory according to customer specifications or adjusted by customers themselves

Technical Data

Port Size		1/4"
Flow Coefficient (Cv)		High-Flow (HF) Port: 0.27 Low-Flow (LF) Port: 0.02 ~ 0.12 ①
Orifice Size		0.16 in. (4.1 mm)
Working Pressure		Vacuum to 145 psig (10 bar)
Pneumatic Actuator Working Pressure		60 ~ 90 psig (4.2 ~ 6.2 bar)
Working Temperature		PFA: 14 ~ 302 °F (-10 ~ 150 °C) PCTFE: 14 ~ 176 °F (-10 ~ 80 °C)
Leak Rate (Helium)	**Internal**	$\leqslant 1\times10^{-9}$ std·cm³/s
	External	$\leqslant 1\times10^{-9}$ std·cm³/s

① Note: Valve Cv values in low-flow mode can be preset at the factory according to customer specifications or adjusted by customers themselves. For detailed operating instructions, please refer to page **V-41**.

Flow Data

Air @ 70 °F (21 °C)
Water @ 60 °F (16 °C)

Orifice in. (mm)	Pressure Drop to Atmosphere psig (bar)	Air (l/min)	Water (l/min)
0.16 (4.1)	10 (0.68)	86	3.2
	50 (3.4)	230	7.2
	100 (6.8)	410	10.2

Process Specification

Item / Process Specification	Ultra High Purity Process (FC-03)
Material	316L SS or 316L SS VAR
Wetted Surface Roughness	Ra 5 µin. (0.13 µm)
Polishing Process	Electropolished
Cleaning	Ultra high purity cleaning in continuously monitored ultrasonic cleaning system with deionized water
Assembly Environment	ISO 4 (FS 209E 10 equivalent) cleanroom
Packaging	Double bagged, packaged in the cleanroom

Notes: Refer to page P-01 for a detailed description of Process Specification.

Major Materials of Construction

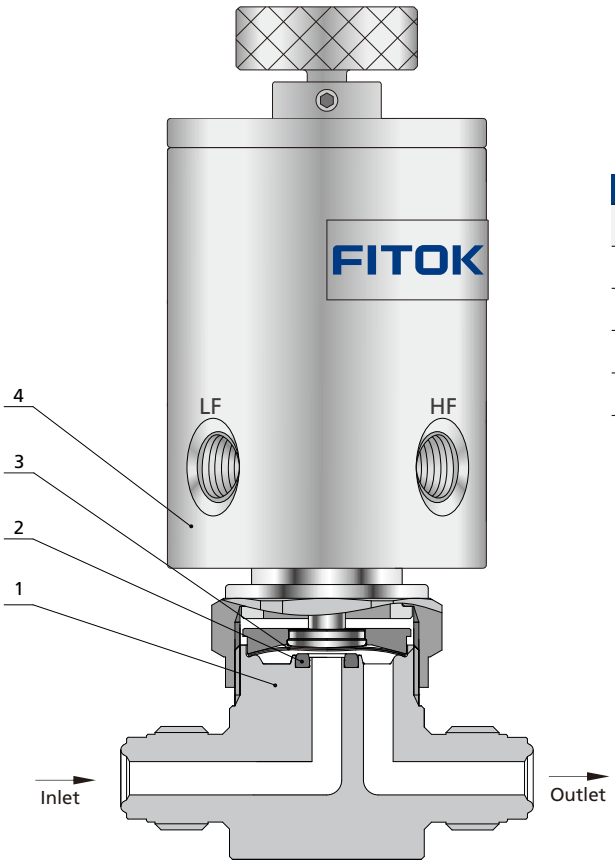

Nomally Closed Pneumatic Actuator

Item	Component	Material/Specification
1	Body	316L SS or 316L SS VAR
2	Seat	PCTFE/ASTM D1430 or PFA/ASTM D3307
3	Diaphragm (2)	Cobalt Alloy/AMS 5876
4	Actuator	Aluminium

Dimensions and Ordering Information

Dimensions, in inches (millimeters), are for reference only.

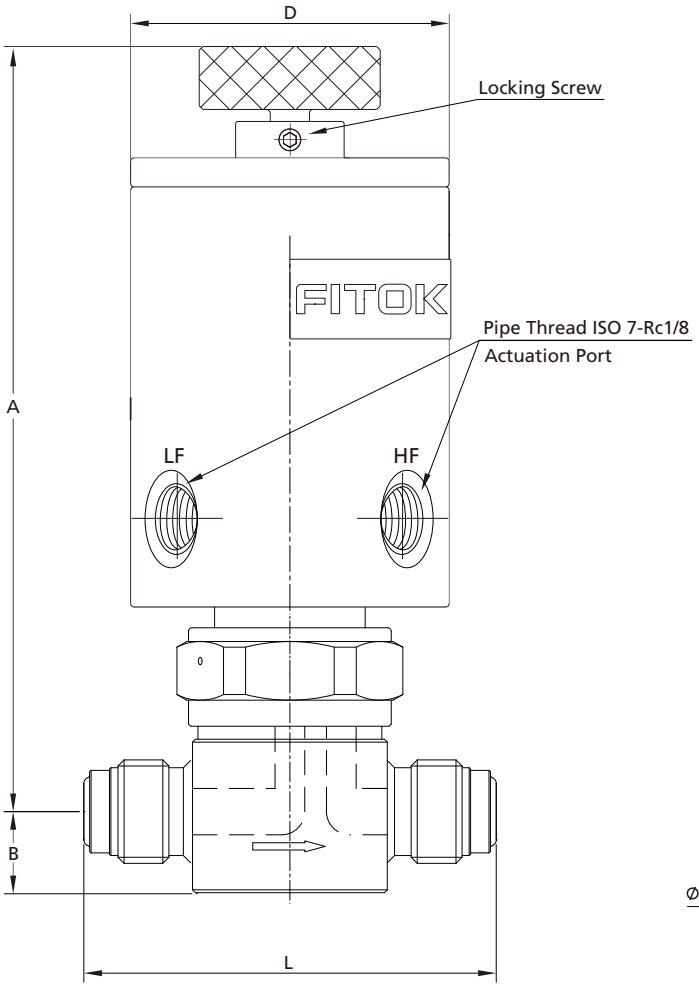

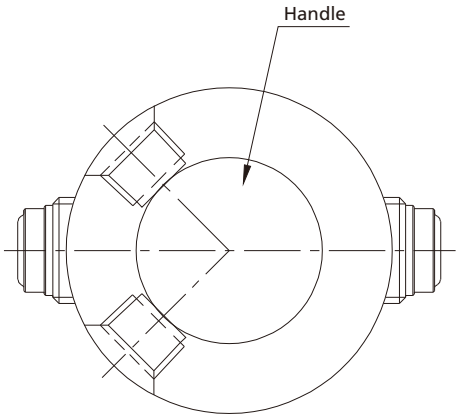

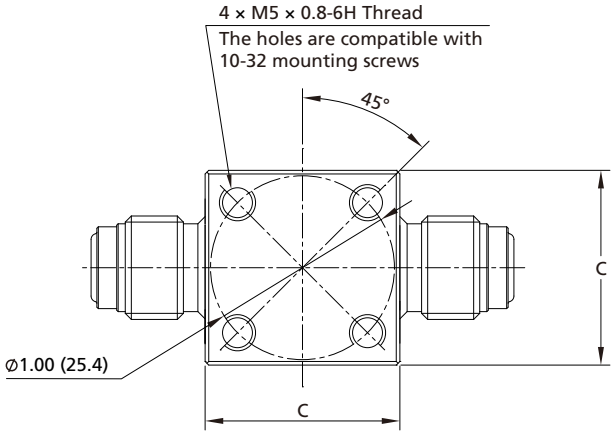

Flow Adjustment Instructions for Low-Flow Mode:

Loosen the locking screws and turn the handle clockwise to the end. Then, rotate the handle counterclockwise until the desired Cv value is reached (see below relationship between Cv and handle adjusting angle). Once the desired Cv is achieved, tighten the locking screws.

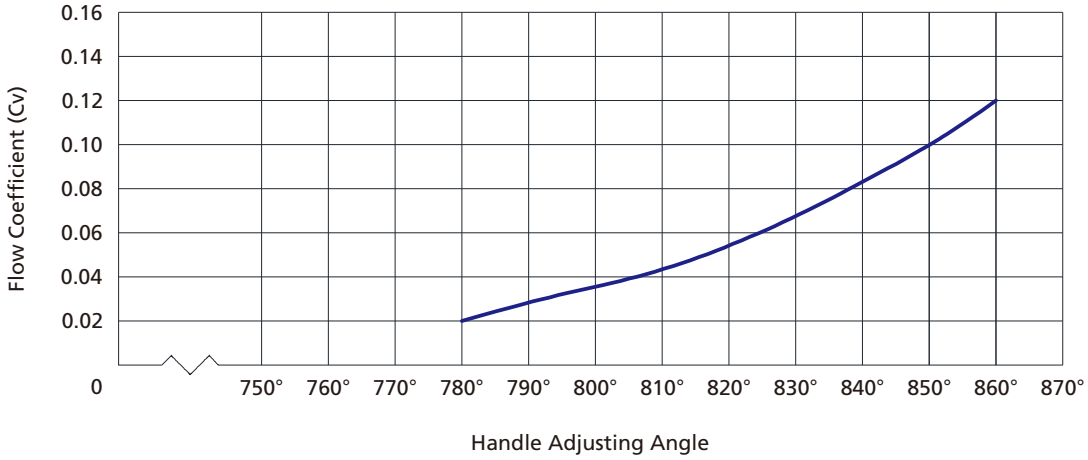

Note: The rotation angle for turning the handle counterclockwise by one complete turn is 360°. Consequently, two complete turns equal 720°, and this pattern continues accordingly for additional turns.

Basic Ordering Number	Connection Type and Size	Dimensions, in. (mm)				
		A	B	C	D	L
DPT6L-FR4-CAF3	1/4" Integral Male FR Fitting	4.15 (105.5)	0.44 (11.2)	1.06 (26.9)	1.73 (44.0)	2.24 (57.0)
DPT6L-FFR4-CAF3	1/4" Rotatable Female FR Fitting					2.78 (70.6)

Ordering Number Description

DPT6L - FFR4 - RFR4 - CAF3 - CE

Body Material	
6L	316L SS
6LV	316L SS VAR

Inlet Type	
FR	Integral Male FR Fitting
FFR	Rotatable Female FR Fitting
RFR	Rotatable Male FR Fitting

Inlet Size	
4	1/4"

Outlet Type / Outlet Size	
	Same as Inlet
	Specified in the same way as Inlet

Actuator Type	
C	Normally Closed Pneumatic

Seat	
	PCTFE
A	PFA

Process Specification	
F3	FC-03

Product Certification	
	None
CE	CE Certification
AX	ATEX Certification

Notes:
1. "Ordering Number Description" is a reference to understand the combination rules of FITOK product part number. Not all combinations are available, Should you have any questions, please contact FITOK Group or our authorized distributors.
2. For the -CE or AX options, the valve conforms to ATEX certification, with "CE" marking and explosion protection "EX" marking. For position sensor selections, the -CE option includes a 3-wire position sensor compliant with CE certification, while the -AX option includes a 2-wire explosion-proof position sensor compliant with ATEX certification. The 2-wire explosion-proof position sensor requires use with an isolating switch amplifier.