Tools and Installation Instructions

FITOK

Tools

Manual Presetting Tools

To preset double ferrules onto T15A or T20D series tubing.
Tubing sizes available in 1/8", 1/4", 3/8" and 1/2" O.D.

Ordering Number	Tube O.D., in.
PST-2D	1/8
PST-4D	1/4
PST-6D	3/8
PST-8D	1/2

Hydraulic Presetting Tools

To preset double ferrules onto T15A or T20D series tubing.
Tubing sizes available in 1/2", 9/16", 3/4" and 1" O.D.

Ordering Number	Description
HPT-DF	With full set of die heads
HPT-N	Without die heads The die heads can be ordered individually.

Die Heads

Die Heads

Ordering Number	Tube O.D., in.
HPT-DFF8	1/2
HPT-DFF9	9/16
HPT-DFF12	3/4
HPT-DFF16	1

Manual Coning Tools

Applied in T20M and T60H series tubing for concentric cone processing. All the manual coning tools use the same basic tools on which the cutter heads and the collets of different sizes can be replaced. A complete ordering number shall include that of the basic tool, collet and cutter head. The collet and the cutter head can be ordered separately. For detailed information, please refer to the relevant instruction manual or contact FITOK Group.

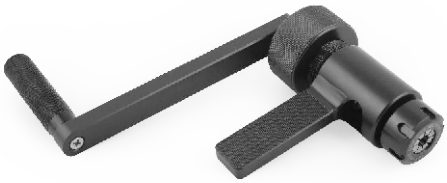

Cutter Head

Collet

Connection	Tube O.D. x I.D. in.	Complete Ordering Number of Tool	Ordering Number of Collet	Ordering Number of Cutter Head
MF4	1/4 × 0.109	HCT-M4	HCT-4-CO	HCT-M4-DT
MF6	3/8 × 0.203	HCT-M6	HCT-6-CO	HCT-M6-DT
MF9	9/16 × 0.312	HCT-M9	HCT-9-CO	HCT-M9-DT
HF4	1/4 × 0.083	HCT-H4	HCT-4-CO	HCT-H4-DT
HF6	3/8 × 0.125	HCT-H6	HCT-6-CO	HCT-H6-DT
HF9	9/16 × 0.188	HCT-H9	HCT-9-CO	HCT-H9-DT

Manual Threading Tools

Applied in T20M and T60H series tubing for thread processing. All the manual threading tools use the same basic tools to process threads by replacing threading dies and guide bushings of different sizes. A complete ordering number shall include that of the basic tool, threading die and guide bushing. The threading die and the guide bushing can be ordered separately. For detailed information, please refer to the instruction manual or contact FITOK Group.

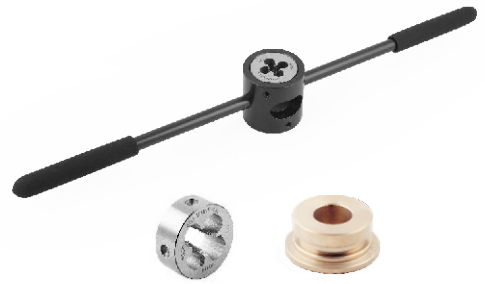

Threading Die Bushing

Connection	Tube O.D. x I.D. in.	Thread Size (Left Hand)	Complete Ordering Number of Tool	Ordering Number of Threading Die	Ordering Number of Bushing
MF4	1/4 × 0.109	1/4-28 UNF	HTT-4	HTT-4-D	HTT-4-GS
MF6	3/8 × 0.203	3/8-24 UNF	HTT-6	HTT-6-D	HTT-6-GS
MF9	9/16 × 0.312	9/16-18 UNF	HTT-9	HTT-9-D	HTT-9-GS
HF4	1/4 × 0.083	1/4-28 UNF	HTT-4	HTT-4-D	HTT-4-GS
HF6	3/8 × 0.125	3/8-24 UNF	HTT-6	HTT-6-D	HTT-6-GS
HF9	9/16 × 0.188	9/16-18 UNF	HTT-9	HTT-9-D	HTT-9-GS

Manual Reseating Tools

The tool is used for repairing the wearing cone seat of medium and high pressure fittings or valves. For detailed information, please refer to the instruction manual or contact FITOK Group.

Connection	Ordering Number
MF4	HRT-M4
MF6	HRT-M6
MF9	HRT-M9
MF12	HRT-M12
MF16	HRT-M16
HF4	HRT-H4
HF6	HRT-H6
HF9	HRT-H9

Installation Instructions

Installation of 20D Series Connections

For Tube O.D. 1/8", 1/4", 3/8" and 1/2"

Without Manual Presetting Tool

1. Put the nut and ferrules onto the tubing in fixed sequence and orientation (Fig. 1).
2. Insert the tubing into the fitting body or the valve. Finger tight the nut. Make sure that the tubing rests firmly on the shoulder of the fitting body or the valve (Fig. 2).
3. Mark the nut and the fitting body or the valve (Fig. 3).
4. Hold the fitting body or the valve steady. Refer to Table 1 to tighten the nut with a wrench to the specified number of turns, noting that the number of turns varies for different types of tubing (Fig. 4).

Table 1

Tube Type/Specification	T15A/T20D Tubing	T20M Tubing
1/8"	1 1/4 turns	/
1/4"	1 1/2 turns	1 5/8 turns
3/8"	1 1/2 turns	1 5/8 turns
1/2"	1 1/2 turns	/

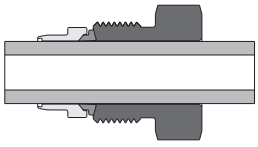

Fig.1

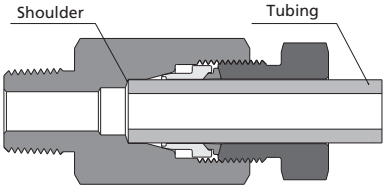

Fig.2

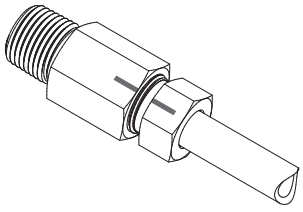

Fig.3

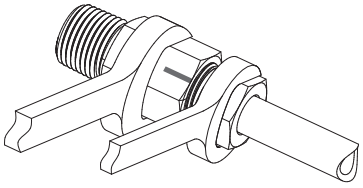

Fig.4

With Manual Presetting Tool

1. Put the nut and ferrules onto the tubing in fixed sequence and orientation (Fig. 1).
2. Insert the tubing into the manual presetting tool. Finger tight the nut. Make sure that the tubing rests firmly on the shoulder of the presetting tool (Fig. 5).
3. Mark the nut and the manual presetting tool (Fig. 6).
4. Hold the manual presetting tool steady. Refer to Table 1 to tighten the nut with a wrench to the specified number of turns, noting that the number of turns varies for different types of tubing (Fig. 4).
5. Loosen the nut and remove the tubing with preassembled ferrules from the manual presetting tool (Fig. 7).
   Note: If the tubing sticks into the manual presetting tool, remove the tubing by gently rocking it back and forth. Do not rotate the tubing.
6. Insert the tubing with preassembled ferrules into the fitting body or the valve. Finger tight the nut (Fig. 8).
7. Tighten the nut 1/4 turn with a wrench while holding the fitting body or the valve steady.

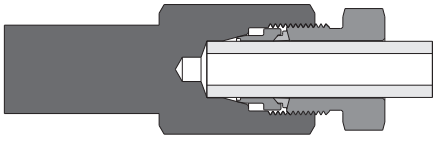

Fig.5

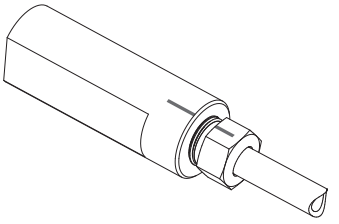

Fig.6

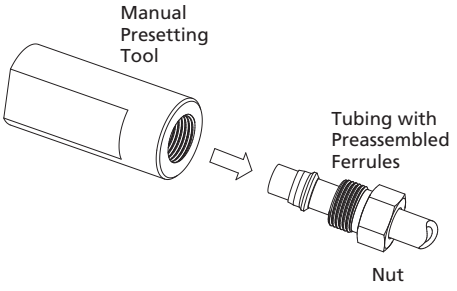

Fig.7

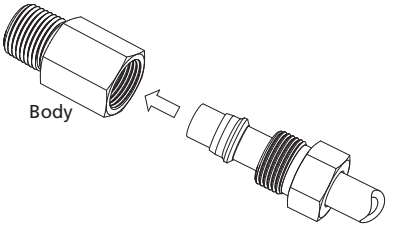

Fig.8

For Tube O.D. 1/2", 9/16", 3/4" and 1"

1. Preassemble the ferrules onto tubing using the hydraulic presetting tool. For details, please contact FITOK for instruction manual Hydraulic Presetting Tools.
2. Insert the tubing with preassembled ferrules into the fitting body or the valve. Finger tight the nut.
3. While holding the fitting body or the valve steady, tighten the nut 1/4 turn for tubing O.D. 1/2", 9/16" and 3/4" and 1/2 turn for tubing O.D. 1" with a wrench.

Reinstallation Instructions

1. Insert the tubing with preassembled ferrules into the fitting body or valve body. Finger-tighten the nut.
2. While holding the fitting body or valve body steady, tighten the nut to the previously assembled position, then further tighten slightly with a wrench.

For Plugs

1. Insert the plug into the fitting body or the valve.
2. For initial installation, finger tight the nut, further wrench tighten 1/2 turn while holding the fitting body or the valve body steady. For reinstallations thereafter, starting from the final tightened position in the previous assembly, further wrench tighten as may be necessary.

Cautions

1. Tube end includes tubing, ferrules and ferrule nut.
2. Do not loosen or tighten fittings when the system is pressurized.
3. When assembling a tube fitting, screw the nut while holding the body steady.

Installation of Medium & High Pressure Coned and Threaded Connections

1. Cut off tubing to desired length and deburr ends.
Note: When cutting tubing with abrasive cutting off wheel, tubing should not be over heated effecting material properties.
Tips: The housing assemblies of manual coning tool can be used to clamp the tubing.
Suitable manual reseating tool can help to deburr ends.

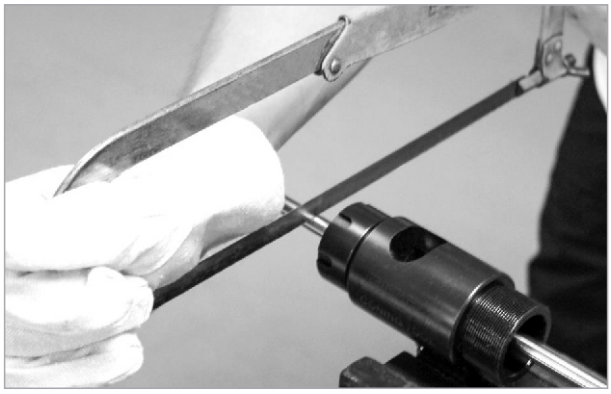

The length L can be calculated by this way:

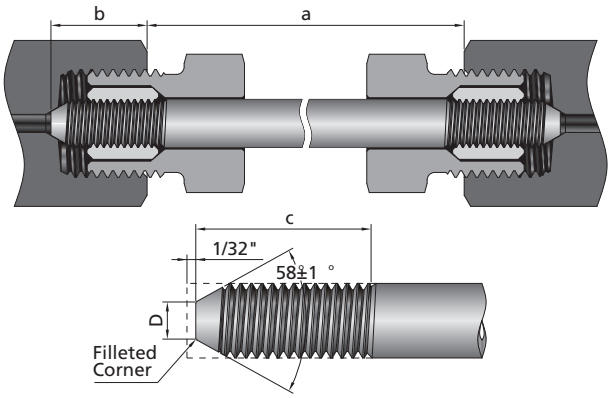

Fig.1

L=a+2b+2×1/32"
L: Tubing length
a: Component distance
b: Tubing engagement (please see the table below)
1/32": Standard face distance per tubing

Rated Pressure psig (bar)	Connection Type	Tube O.D. x I.D. in.	b in. (mm)
20000 (1379)	MF4	1/4 × 0.109	0.55(13.97)
	MF6	3/8 × 0.203	0.69(17.53)
	MF9	9/16 × 0.312	0.84(21.34)
60000 (4137)	HF4	1/4 × 0.083	0.50(12.70)
	HF6	3/8 × 0.125	0.69(17.53)
	HF9	9/16 × 0.188	0.84(21.34)

2. Process the tube end into the structure as shown on the right. For dimensions please see the table below.

Tips: For 1/4", 3/8" and 9/16" O.D. tubing, manual coning and threading tools can be used to make coned and threaded nipples.

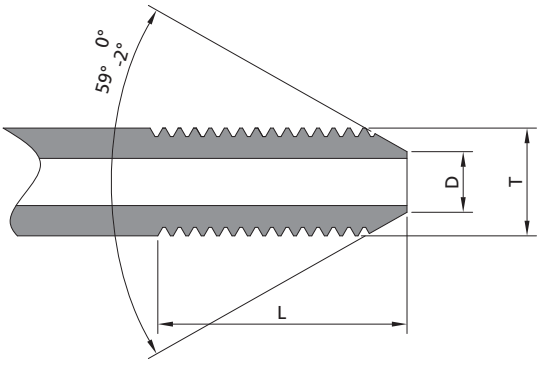

Tube O.D. x I.D. in.	Connection	T - Thread Size (Left Hand)	D in. (mm)	L in. (mm)
1/4 × 0.109	MF4	1/4-28 UNF	0.14 (3.6)	0.34 (8.7)
3/8 × 0.203	MF6	3/8-24 UNF	0.25 (6.4)	0.44 (11.1)
9/16 × 0.312	MF9	9/16-18 UNF	0.41 (10.3)	0.50 (12.7)
3/4 × 0.438	MF12	3/4-16 UNF	0.56 (14.3)	0.63 (15.9)
1 × 0.562	MF16	1-14 UNS	0.72 (18.3)	0.78 (19.8)
1 1/2 × 0.937	MF24	1 1/2-12 UNF	1.06 (27.0)	1.00 (25.4)
1/4 × 0.083	HF4	1/4-28 UNF	0.13 (3.2)	0.56 (14.3)
3/8 × 0.125	HF6	3/8-24 UNF	0.22 (5.6)	0.75 (19.1)
9/16 × 0.188	HF9	9/16-18 UNF	0.28 (7.1)	0.94 (23.8)

3. First, insert the tube through the gland, and then screw in the collar counterclockwise (left-hand threads) until the conical end of the tube showing 1-2 full threads.
4. Apply thread lubricant evenly on the gland threads, and if possible, coat the cone tip with a small amount of lubricant which is compatible with the system media.

Medium Pressure **High Pressure**

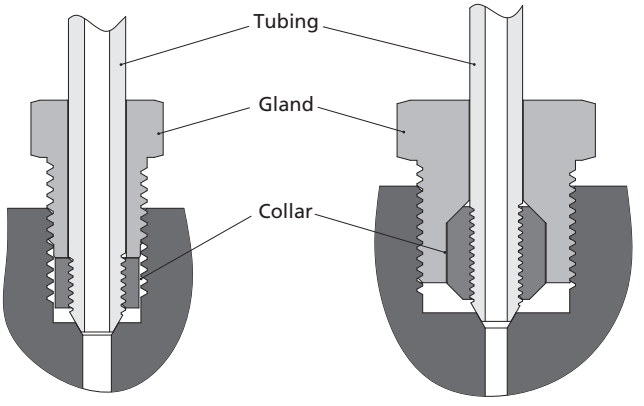

5. Insert the tubing into the connecting port and finger tighten the gland.
6. Use a torque wrench to tighten the gland with the required torque shown in the table below while holding fitting body or valve steady.

Note: The installation torque may vary depending on the type of grease used.

Tube O.D. x I.D. in.	Connection	Required Torque for Standard Service Products ft.-lbs. (N·m)①	Required Torque for Sour Service Products ft.-lbs. (N·m)①
1/4 × 0.109	MF4	20 (27.1)	10 (13.6)
3/8 × 0.203	MF6	30 (40.6)	15 (20.3)
9/16 × 0.312	MF9	55 (74.5)	30 (40.7)
3/4 × 0.438	MF12	90 (122)	45 (61.0)
1 × 0.562	MF16	125 (170)	100 (135.6)
1 1/2 × 0.937	MF24	200 (270)	/
1/4 × 0.083	HF4	25 (33.9)	15 (20.3)
3/8 × 0.125	HF6	50 (67.8)	25 (33.9)
9/16 × 0.188	HF9	110 (149.1)	55 (74.6)

Installation of Medium & High Pressure Anti-Vibration Gland Assembly

Anti-Vibration Gland Assembly replaces the standard gland.

1. Insert coned and threaded tubing through the Anti-Vibration Gland Assembly in the correct order as shown in the following figure, and then screw in the collar until the conical end of the tube showing 1-2 full threads.
2. For 20M series medium pressure Anti-Vibration Gland Assembly, tighten collet body to required torque for standard fittings while holding fitting body or valve steady. Then finger tighten the gland nut, and tighten the gland nut 1-1/4 turns for initial installation with a wrench while holding the collet body steady. For reinstallation, tighten the gland nut with a wrench from finger tight to 3/4 turn.
3. For 60H series high pressure Anti-Vibration Gland Assembly, use a torque wrench to tighten the gland nut with the required torque shown in the table below while holding fitting body or valve steady.

Tube O.D. x I.D. in.	Connection	Required Torque ft.-lbs. (N·m)
1/4 × 0.083	HF4	10 (13.6)
3/8 × 0.125	HF6	28 (38.0)
9/16 × 0.188	HF9	75 (101.7)

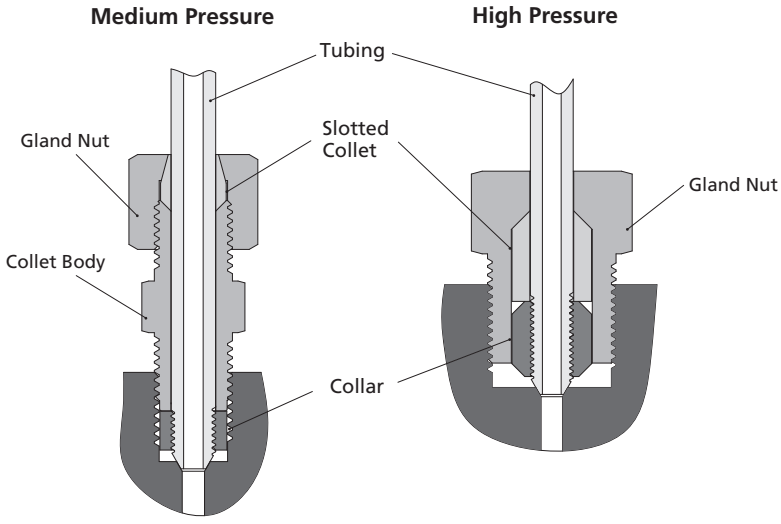

Note: When installing, please follow the given method and required torque ; otherwise it will affect the performance of the product.