Medium Flow Diaphragm Regulators

RDGH Series

Introduction

RDGH Series Medium Flow Diaphragm Regulators feature a single-stage pressure reduction design with a combination of metal diaphragm and free poppet. This configuration ensures excellent sensitivity and stable outlet pressure, making these valves ideal for various gas media with medium to high flow.

Features

- ◎ Large diameter diaphragm offers enhanced pressure sensitivity.
- ◎ Metal-to-metal seal between valve body and diaphragm provides ensured sealing performance.
- ◎ Reinforced diaphragm design extends diaphragm service life.
- ◎ The bonnet includes a captured vent port, allowing media to be vented to a designated location in the event of accidental diaphragm rupture.

Technical Data

Port Size			3/8" to 3/4", 10 mm or 12 mm
Max. Working Pressure			500 psig (34.5 bar)
			3000 psig (207 bar)
Outlet Pressure Range			0 ~ 25 psig (0 ~ 1.7 bar)
			0 ~ 50 psig (0 ~ 3.4 bar)
			0 ~ 100 psig (0 ~ 6.9 bar)
			0 ~ 150 psig (0 ~ 10.3 bar)
			0 ~ 200 psig (0 ~ 13.8 bar)
Flow Coefficient (Cv)			1.0
Working Temperature ①			PCTFE: -40 ~ 165 °F (-40 ~ 74 °C)
			PEEK: -40 ~ 400 °F (-40 ~ 204 °C)
SPE (Supply Pressure Effect)	**Max. Inlet Pressure: 500 psig**		2 psig per 100 psig source pressure change
	Max. Inlet Pressure: 3000 psig		0.5 psig per 100 psig source pressure change
Leak Rate	**External**	**Inboard**	$\leqslant 2\times10^{-10}$ std·cm^3/s (Helium)
		Outboard	$\leqslant 1\times10^{-9}$ std·cm^3/s (Helium)
	Internal		Max. Inlet Pressure 500 psig: $\leqslant 4\times10^{-8}$ std·cm^3/s (Helium)
			Max. Inlet Pressure 3000 psig: Bubble tight

① For the working temperature of products equipped with a pressure gauge, a relief valve, or both, please refer to the **catalog for Pressure Gauges** or **Relief Valves**.

Flow Data

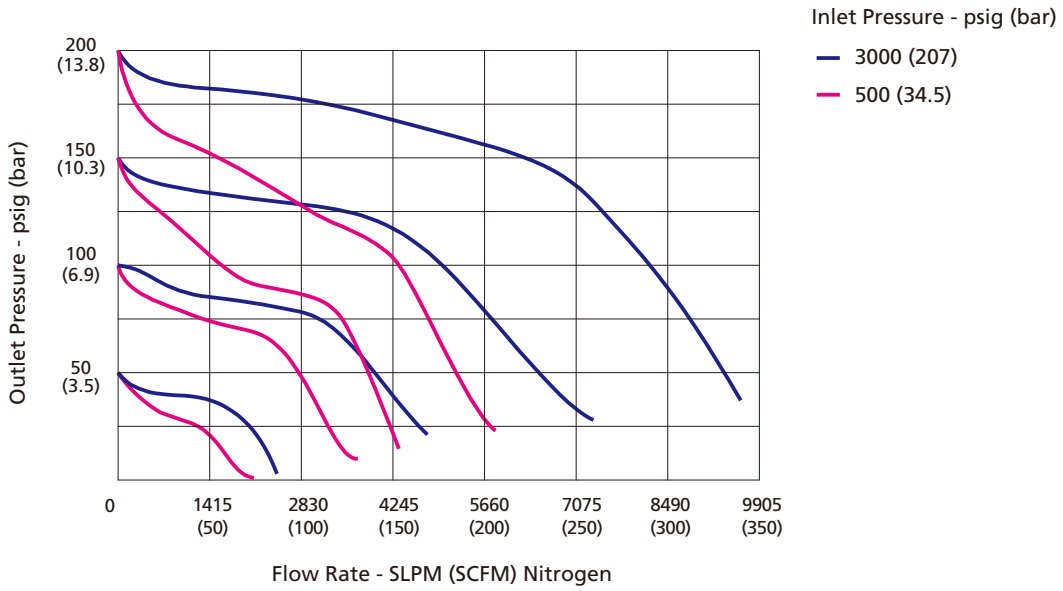

Process Specification

Process Specification / Item	Special Cleaning and Packaging Process (FC-02)		Ultra High Purity Process (FC-03)
Material	316L SS, 316L SS VAR	Brass (Nickle-Plated)	316L SS, 316L SS VAR
Wetted Surface Roughness	Face Seal Connection or Butt Weld Connection: Ra 20 µin. (0.5 µm) Threaded Connection or Tube Fitting Connection: Ra 32 µin. (0.8 µm)	Threaded Connection or Tube Fitting Connection: Ra 32 µin. (0.8 µm)	Face Seal Connection or Butt Weld Connection: Ra 10 µin. (0.25 µm)
Polishing Process	Machine Finished		Electropolished
Assembly Environment	In specially cleaned areas		ISO 4 (FS 209E 10 equivalent) cleanroom
Packaging	Double bagged		Double bagged in cleanroom

Note: For products with higher surface finish, please contact FITOK.

Major Materials of Construction

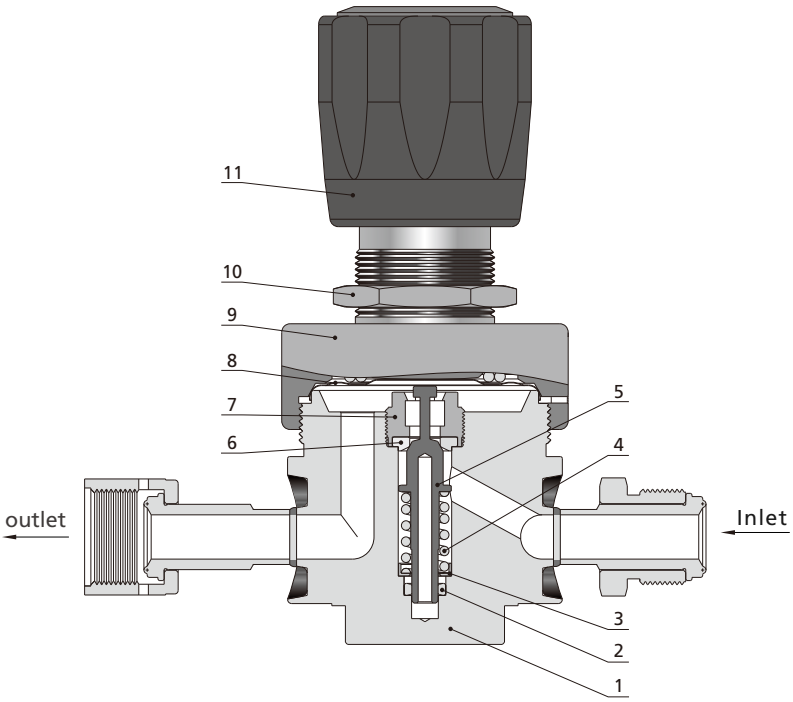

Item	Component	Material/Specification		
		6L	6LV	B
1	Body	316L SS	316L SS VAR	Brass
2	Guide Ring or Metal Spring Energized Seal	PTFE/ASTM D1710 or PTFE/ASTM D1710 and 316 SS/ASTM A479		
3	Spring Seat	316L SS	316L SS VAR	316L SS
4	Poppet Spring	316 SS/ASTM A313	Alloy X-750	316 SS/ASTM A313
5	Lift Poppet	316L SS	316L SS VAR	316L SS
6	Seat	PCTFE/ASTM D1430 or PEEK		
7	Seat Retainer	316L SS	316L SS VAR	316L SS
8	Diaphragm	316L SS/ASTM A240	Alloy 22	316L SS/ASTM A240
9	Bonnet	304 SS/ASTM A479	304 SS/ASTM A479	Brass
10	Panel Nut	304 SS/ASTM A479		
11	Handle	ABS or Aluminium alloy (PEEK Seat optional)		

Porting Configurations

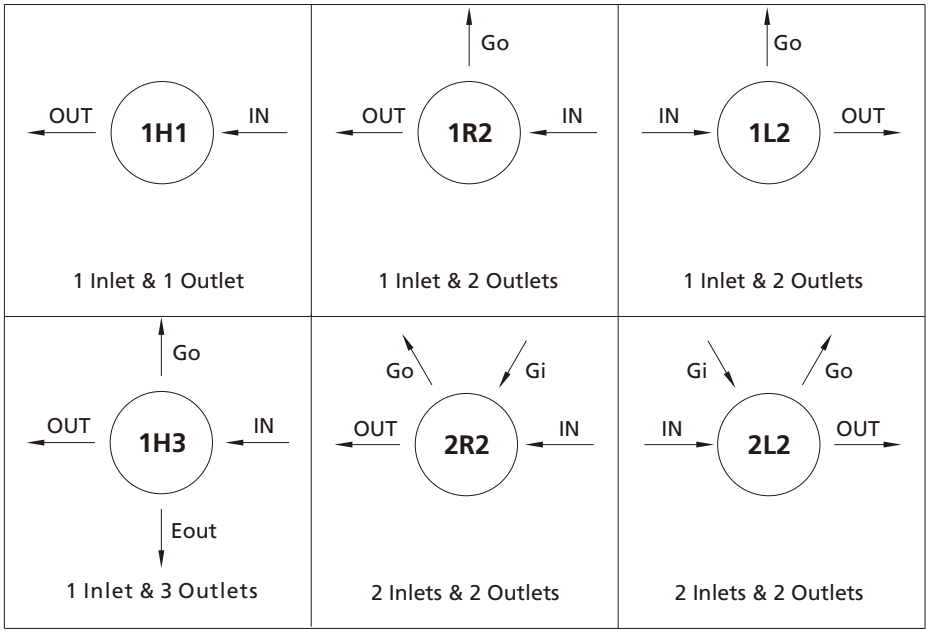

Porting Configuration Symbol

IN	OUT	Gi	Go	Eout
Inlet	Outlet	Inlet Pressure Gauge Port	Outlet Pressure Gauge Port	Auxiliary Outlet

Notes:
1. IN and OUT are the inlet and outlet ports for connecting the valve to the system. Ports other than IN and OUT should not be used for system connections.
2. Porting configuration is viewed from the top.

Dimensions

Dimensions, in inches (millimeters), are for reference only.

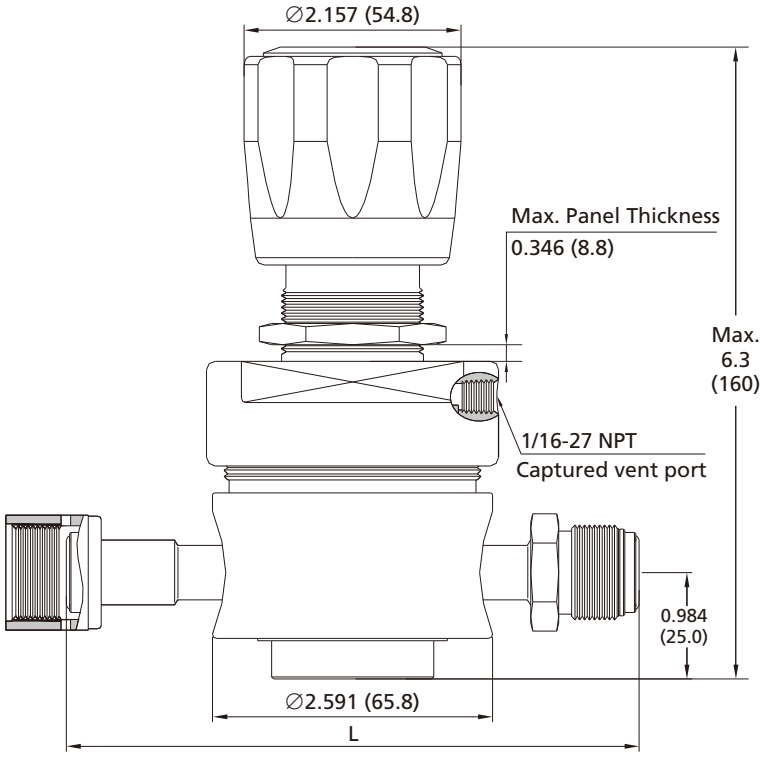

Panel Mounting Cut-Out

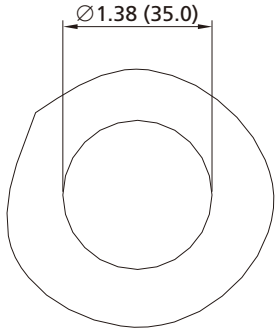

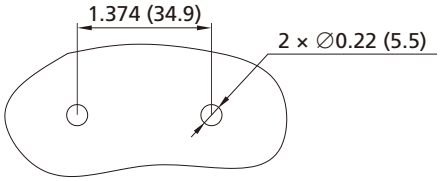

Bottom Mounting Cut-Outs

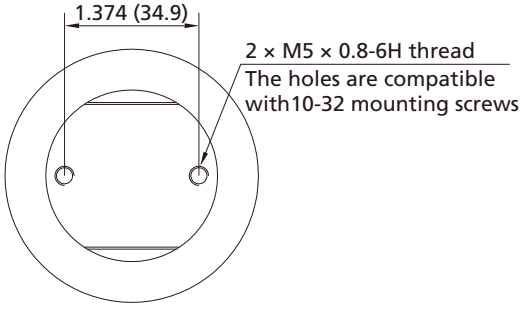

Bottom Mounting Screw Holes

Connection Designator	Connection Type and Size	Dimension, in.(mm)
		L
FL6	3/8" Tube Fitting	5.43 (138.0)
FL8	1/2" Tube Fitting	5.16 (131.0)
FNS8	1/2 Female NPT	2.59 (65.8)
TB8	1/2" × 0.049" Tube Butt Weld	4.34 (110.2)
FFR8	1/2" Rotatable Female FR Fitting	5.28 (134.0)
RFR8	1/2" Rotatable Male FR Fitting	
ML10	10 mm Tube Fitting	5.39 (137.0)
ML12	12 mm Tube Fitting	5.59 (142.0)
FFR12	3/4" Rotatable Female FR Fitting	5.99 (152.2)
RFR12	3/4" Rotatable Male FR Fitting	

Ordering Number Description

RDGH - 6L - 3K - 1H - 2R2 - FNS8 - FL8 - IB - OB - P - ATPM - F2

Series	
RDGH	

Max. Inlet Pressure	
5H	500 psig (34.5 bar)
3K	3000 psig (207 bar)

Body Material	
6L	316L SS
6LV	316L SS VAR
B	Brass

Outlet Pressure Range	
25	0~25 psig (0~1.7 bar)
50	0~50 psig (0~3.4 bar)
1H	0~100 psig (0~6.9 bar)
150	0~150 psig (0~10.3 bar)
2H	0~200 psig (0~13.8 bar)

Porting	
1H1	1 Inlet & 1 Outlet
1R2	1 Inlet & 2 Outlets
1L2	1 Inlet & 2 Outlets
1H3	1 Inlet & 3 Outlets
2R2	2 Inlets & 2 Outlets
2L2	2 Inlets & 2 Outlets

Inlet (IN)	
FL6	3/8" Tube Fitting
FL8	1/2" Tube Fitting
FNS8	1/2 Female NPT
TB8	1/2" × 0.049" Tube Butt Weld
FFR8	1/2" Rotatable Female FR Fitting
RFR8	1/2" Rotatable Male FR Fitting
ML10	10 mm Tube Fitting
ML12	12 mm Tube Fitting
FFR12	3/4" Rotatable Female FR Fitting
RFR12	3/4" Rotatable Male FR Fitting

Outlet (OUT)	
	Same as Inlet
Specified in the same way as Inlet	

Inlet Pressure Gauge Port (Gi)	
	Without pressure gauge, refer to Note 4
IB	Gauge psi/bar
IM	Gauge psi/MPa
IP	Plug

Outlet Pressure Gauge Port (Go)	
	Without pressure gauge, refer to Note 4
OB	Gauge psi/bar
OM	Gauge psi/MPa
OP	Plug

Auxiliary Outlet (Eout)	
	Without plug, refer to Note 4
RP	Plug
R	With relief valve, refer to Note 5

Seat Material	
	PCTFE
P	PEEK

Handle	
	Round Handle
AT	For lock nut, see Note 6

Installation Type	
	Threaded Hole at the Bottom
PM	Installed with Panel Nut
BS	Installed with Screws at the Bottom

Process Specification	
F2	FC-02
F3	FC-03

Notes:

1. "Ordering Number Description" is a reference to understand the combination rules of FITOK product part number. Not all combinations are available.
2. For Metal Gasket Face Seal Fitting or Tube Butt Weld ports, the port and body are orbital-welded integral structure by default.
3. For NPT or Metric/Fractional Tube Fitting ports, the body port is 1/2 Female NPT by default. Other options are adapted from Male NPT.
4. When choosing NPT or Metric/Fractional Tube Fitting for inlet and outlet, gauge ports (Gi, Go) and auxiliary outlet (Eout) are 1/4 Female NPT. When choosing Metal Gasket Face Seal Fitting or Tube Butt Weld for inlet and outlet, gauge ports (Gi, Go) are 1/4" Rotatable Male FR Fitting, without auxiliary outlet (Eout) options.
5. For the outlet relief valve, the set pressure is factory-set to 1.05-1.1 times the maximum outlet pressure by default, FITOK can preset the specified set pressure according to customer requirements. Please specify the desired set pressure when placing your order.
6. Lock nut (AT): The metal lock nut construction is designed to prevent accidental pressure adjustments. FITOK can set the specified outlet pressure based on customer requirements; simply include this information in the remarks when placing an order. If the outlet pressure is not specified, customers will need to adjust and fix it themselves.
7. When selecting accessories such as pressure gauges or relief valves, ensure that the media working temperature does not exceed the allowable temperature range of the accessories.
8. For the default pressure gauge configurations, please refer to the pressure gauge ordering information on page A-12.