High Performance Ball Valves

BV Series

Features

- Working pressures up to 6,000 psig (414 bar)
- Working temperature: -65°F to 450°F (-54°C to 232°C)
- Cv up to 6.42
- Available in 2-way or 3-way flow patterns
- Angle-pattern flow path available
- Each valve is factory leak-tested with nitrogen or compressed air at rated pressure

Pressure vs. Temperature

316 SS Body

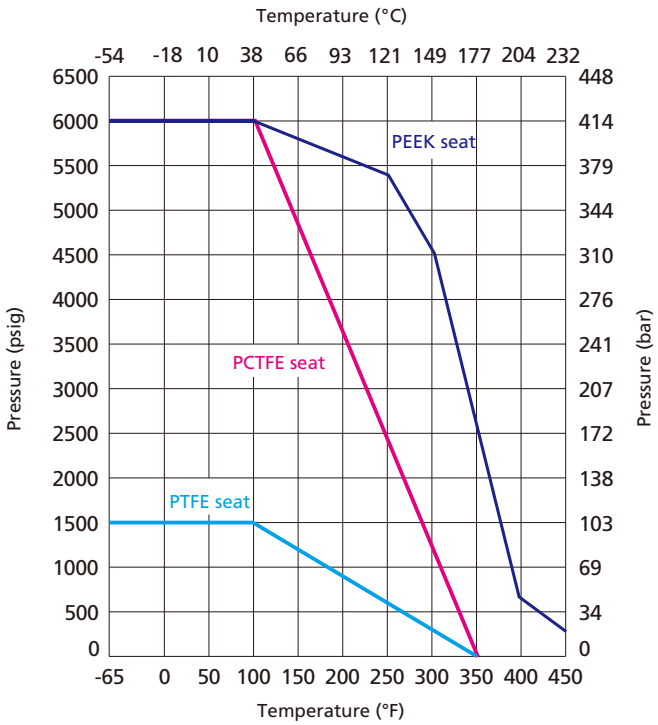

Brass Body

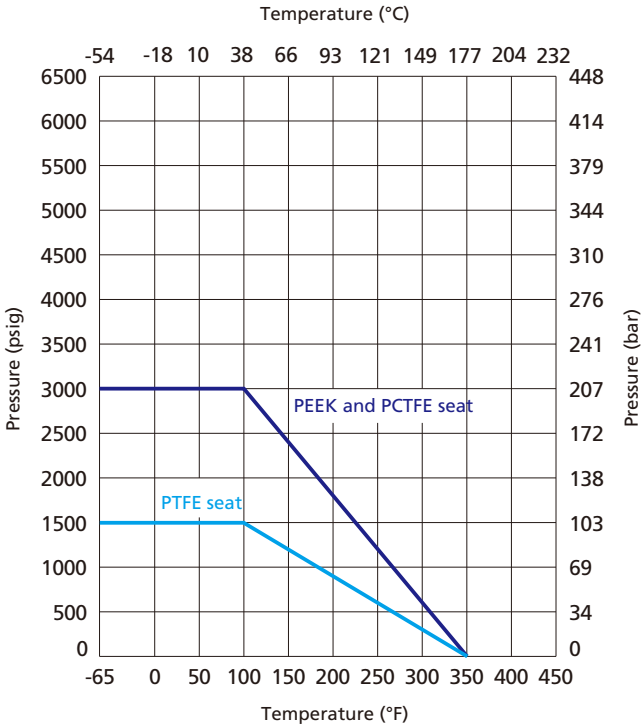

Note: The working pressure of valves is restricted by materials of the valve body and seat, as well as end connections. When choosing a valve for your applications, please refer to the above Temperature vs. Pressure Curves and the pressure rating in the dimension table. The minimum value shall be the pressure rating of the valve.

Pressure Rating@100°F (38°C)

End Connection	Pressure Rating, psig (bar)	
	Brass	316 SS
FL1、FL2、FL4、ML3、ML6、FNS2、FNS4、FNS6、FNS8、FNS12 NS2、NS4、NS6、NS8、NS12 RT2、RT4、RT6、RT8、RT12 FRT2、FRT4、FRT6、FRT8、FRT12 FRP2、FRP4、FRP6、FRP8、FRP12 BP2、BP4、BP6、BP8、BP12	3000 (207)	6000 (414)
ML8	2300 (159)	
FL6	2200 (152)	
FL8	2100 (145)	
ML12	2000 (138)	
ML10、ML14	1900 (131)	
FL12	1800 (124)	5800 (400)
ML16	1700 (117)	
ML20	1600 (110)	5500 (379)
ML18		5400 (372)
ML22	1450 (100)	4900 (338)

Standard Materials of Construction

Straight Valves

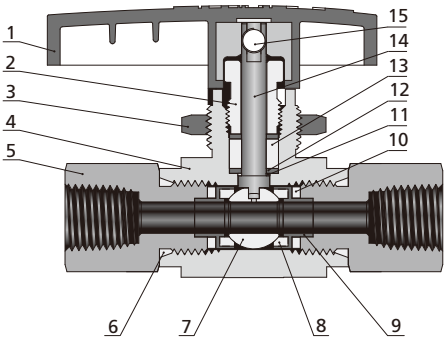

Item	Component	Valve Body Material	
		SS	Brass
1	Handle	Nylon or Aluminium	
2	Packing Nut	316 SS/A479	C36000/B16
3	Panel Nut	316 SS/A479	
4	*Body*	*CF8M/A351*	*C37700/B283*
5	*End Connection*	*316 SS/A479*	*C36000/B16*
6	*Connection Ring*	*PTFE*	
7	*Ball*	*316 SS/A479*	
8	*Seat*	*PTFE or PCTFE or PEEK*	
9	*Seat Retainer*	*316 SS/A479*	
10	*Seat Packing*	*PTFE*	
11	*Stem Back-up Ring*	*PEEK*	
12	*Stem Washer*	*316/A479*	
13	*Stem Packing*	*PTFE*	
14	*Stem*	*316 SS/A479*	
15	Set Screw	Zinc-plated carbon steel	
	Lubricants	*Fluorinated-based*	

Note: Wetted components are listed in italics.
For other materials, please contact FITOK Group or our authorized distributors.

3-way Valves

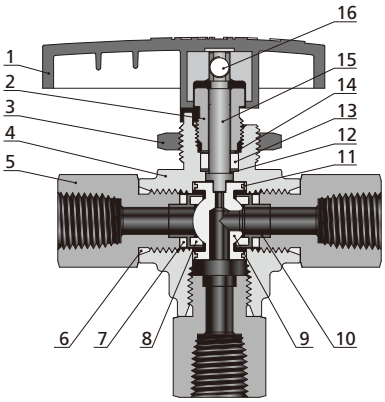

Item	Component	Valve Body Material	
		SS	Brass
1	Handle	Nylon or Aluminium	
2	Packing Nut	316 SS/A479	C36000/B16
3	Panel Nut	316 SS/A479	
4	*Body*	*CF8M/A351*	*C37700/B283*
5	*End Connection*	*316 SS/A479*	*C36000/B16*
6	*Connection Ring*	*PTFE*	
7	*Seat Packing*	*PTFE*	
8	*Seat*	*PTFE or PCTFE or PEEK*	
9	*Ball*	*316 SS/A479*	
10	*Seat Retainer*	*316 SS/A479*	
11	*Trunnion Bearing*	*PEEK*	
12	*Stem Back-up Ring*	*PEEK*	
13	*Stem Packing*	*PEEK*	
14	*Stem Washer*	*316 SS/A479*	
15	*Stem*	*316 SS/A479*	
16	Set Screw	Zinc-plated carbon steel	
	Lubricants	*Fluorinated-based*	

Note: Wetted components are listed in italics.
For other materials, please contact FITOK Group or our authorized distributors.

Angle Pattern Valves

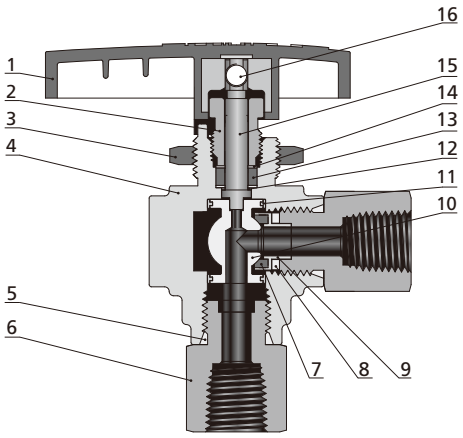

Item	Component	Valve Body Material	
		SS	Brass
1	Handle	Nylon or Aluminium	
2	Packing Nut	316 SS/A479	C36000/B16
3	Panel Nut	316 SS/A479	
4	*Body*	*CF8M/A351*	*C37700/B283*
5	*Connection Ring*	*PTFE*	
6	*End Connection*	*316 SS/A479*	*C36000/B16*
7	*Seat*	*PTFE or PCTFE or PEEK*	
8	*Seat Packing*	*PTFE*	
9	*Seat Retainer*	*316 SS/A479*	
10	*Ball*	*316 SS/A479*	
11	*Trunnion Bearing*	*PEEK*	
12	*Stem Back-up Ring*	*PEEK*	
13	*Stem Packing*	*PTFE*	
14	*Stem Washer*	*316 SS/A479*	
15	*Stem*	*316 SS/A479*	
16	*Set Screw*	*Zinc-plated carbon Steel*	
	Lubricants	*Fluorinated-based*	

Note: Wetted components are listed in italics.
For other materials, please contact FITOK Group or our authorized distributors.

Dimensions

Straight Valves

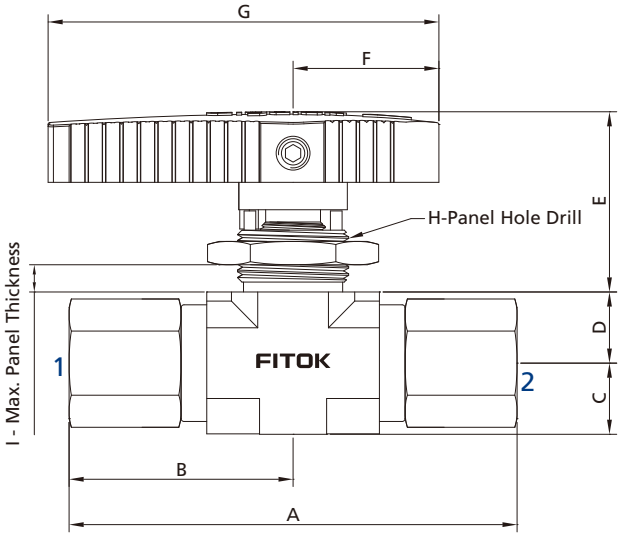

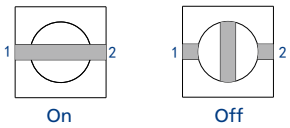

Basic Ordering Number	Connection Type and Size	Orifice in. (mm)	Cv	Dimensions, in. (mm)								
	Connection 1/2			A	B	C	D	E	F	G	H	I
BV□□-FL1-01	1/16" FITOK	0.05 (1.3)	0.06	2.60 (66.0)	1.30 (33.0)	0.36 (9.2)	0.33 (8.5)	0.94 (23.9)	0.79 (20.0)	1.97 (50.0)	0.58 (14.7)	0.18 (4.6)
BV□□-FL2-02	1/8" FITOK	0.09 (2.4)	0.21	2.72 (69.0)	1.36 (34.5)							
BV□□-ML3-02	3 mm FITOK			2.74 (69.6)	1.37 (34.8)							
BV□□-FRT2-04	1/8 Female BSPT	0.17 (4.2)	0.93	2.14 (54.4)	1.07 (27.2)							
BV□□-FRP2-04	1/8 Female BSPP											
BV□□-FNS2-04	1/8 Female NPT											
BV□□-RT2-04	1/8 Male BSPT			2.36 (60.0)	1.18 (30.0)							
BV□□-BP2-04	1/8 Male BSPP											
BV□□-NS2-04	1/8 Male NPT											
BV□□-RT4-04	1/4 Male BSPT			2.70 (68.6)	1.35 (34.3)							
BV□□-BP4-04	1/4 Male BSPP											
BV□□-NS4-04	1/4 Male NPT											
BV□□-FL4-05	1/4" FITOK	0.19 (4.7)	1.04	3.48 (88.4)	1.74 (44.2)	0.48 (12.2)	0.48 (12.2)	1.24 (31.5)	0.59 (25.0)	2.64 (67.0)	0.77 (19.6)	0.25 (6.4)
BV□□-ML6-05	6 mm FITOK			3.50 (89.0)	1.75 (44.5)							
BV□□-FL6-06	3/8" FITOK	0.25 (6.4)	2.34	3.60 (91.4)	1.80 (45.7)							
BV□□-ML8-06	8 mm FITOK			3.56 (90.4)	1.78 (45.2)							
BV□□-ML10-06	10 mm FITOK			3.62 (92.0)	1.81 (46.0)							
BV□□-FRT4-06	1/4 Female BSPT			3.02 (76.8)	1.51 (38.4)							
BV□□-FRP4-06	1/4 Female BSPP											
BV□□-FNS4-06	1/4 Female NPT											
BV□□-RT4-06	1/4 Male BSPT			3.24 (82.2)	1.62 (41.1)							
BV□□-BP4-06	1/4 Male BSPP											
BV□□-NS4-06	1/4 Male NPT											
BV□□-RT6-06	3/8 Male BSPT											
BV□□-BP6-06	3/8 Male BSPP											
BV□□-NS6-06	3/8 Male NPT											
BV□□-FL8-10	1/2" FITOK	0.41 (10.3)	6.42	4.68 (118.8)	2.34 (59.4)	0.75 (19.0)	0.71 (18.0)	1.54 (39.0)	1.42 (36.0)	3.78 (96.0)	0.90 (22.9)	0.38 (9.7)
BV□□-FL12-10	3/4" FITOK			4.66 (118.4)	2.33 (59.2)							
BV□□-ML12-10	12 mm FITOK	0.37 (9.5)	5.57									
BV□□-ML14-10	14 mm FITOK	0.41 (10.3)	6.42									
BV□□-ML16-10	16 mm FITOK											
BV□□-ML18-10	18 mm FITOK											
BV□□-ML20-10	20 mm FITOK			4.84 (123.0)	2.42 (61.5)							
BV□□-ML22-10	22 mm FITOK											
BV□□-FRT6-10	3/8 Female BSPT			3.90 (99.0)	1.95 (49.5)							
BV□□-FRP6-10	3/8 Female BSPP											
BV□□-FNS6-10	3/8 Female NPT											
BV□□-FRT8-10	1/2 Female BSPT			4.30 (109.2)	2.15 (54.6)							
BV□□-FRP8-10	1/2 Female BSPP			3.97 (101.0)	1.99 (50.5)							
BV□□-FNS8-10	1/2 Female NPT			4.30 (109.2)	2.15 (54.6)							
BV□□-FRT12-10	3/4 Female BSPT			4.50 (114.2)	2.25 (57.1)							
BV□□-FRP12-10	3/4 Female BSPP											
BV□□-FNS12-10	3/4 Female NPT											
BV□□-RT8-10	1/2 Male BSPT			4.44 (112.8)	2.22 (56.4)							
BV□□-BP8-10	1/2 Male BSPP											
BV□□-NS8-10	1/2 Male NPT											
BV□□-RT12-10	3/4 Male BSPT											
BV□□-BP12-10	3/4 Male BSPP											
BV□□-NS12-10	3/4 Male NPT											

3-way Valves

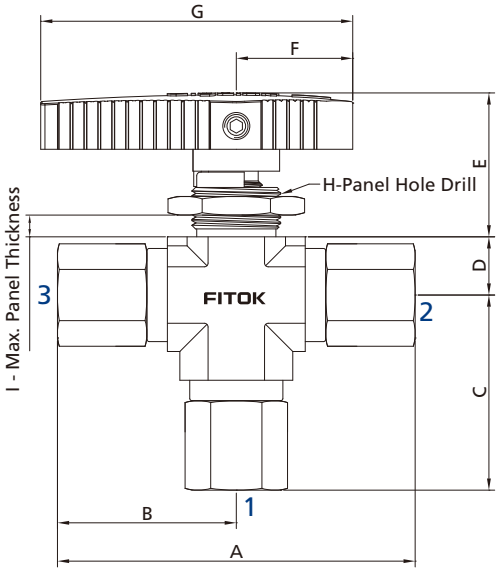

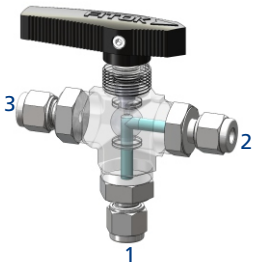

Port 1 to port 2

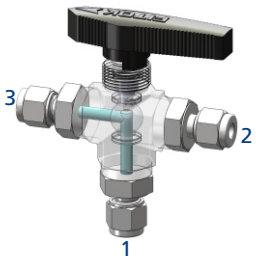

Port 1 to port 3

Basic Ordering Number	Connection Type and Size	Orifice in. (mm)	Cv	Dimensions, in. (mm)								
	Connection 1/2/3			A	B	C	D	E	F	G	H	I
BV□□-FL1-01-3	1/16" FITOK	0.05 (1.3)	0.06	2.60 (66.0)	1.30 (33.0)	1.35 (34.3)	0.33 (8.5)	0.94 (23.9)	0.79 (20.0)	1.97 (50.0)	0.58 (14.7)	0.18 (4.6)
BV□□-FL2-02-3	1/8" FITOK	0.09 (2.4)	0.21	2.72 (69.0)	1.36 (34.5)	1.41 (35.8)						
BV□□-ML3-02-3	3 mm FITOK			2.74 (69.6)	1.37 (34.8)	1.42 (36.1)						
BV□□-FRT2-04-3	1/8 Female BSPT	0.12 (3.0)	0.28	2.14 (54.4)	1.07 (27.2)	1.12 (28.5)						
BV□□-FRP2-04-3	1/8 Female BSPP											
BV□□-FNS2-04-3	1/8 Female NPT			2.36 (60.0)	1.18 (30.0)	1.23 (31.3)						
BV□□-RT2-04-3	1/8 Male BSPT											
BV□□-BP2-04-3	1/8 Male BSPP											
BV□□-NS2-04-3	1/8 Male NPT											
BV□□-RT4-04-3	1/4 Male BSPT			2.70 (68.6)	1.35 (34.3)	1.40 (35.6)						
BV□□-BP4-04-3	1/4 Male BSPP											
BV□□-NS4-04-3	1/4 Male NPT											
BV□□-FL4-05-3	1/4" FITOK	0.19 (4.7)	0.70	3.48 (88.4)	1.74 (44.2)	1.88 (47.7)	0.48 (12.2)	1.24 (31.5)	0.59 (25.0)	2.64 (67.0)	0.77 (19.6)	0.25 (6.4)
BV□□-ML6-05-3	6 mm FITOK			3.50 (89.0)	1.75 (44.5)	1.89 (48.0)						
BV□□-FL6-05-3	3/8" FITOK			3.60 (91.4)	1.80 (45.7)	1.94 (49.2)						
BV□□-ML8-05-3	8 mm FITOK			3.56 (90.4)	1.78 (45.2)	1.92 (48.7)						
BV□□-ML10-05-3	10 mm FITOK			3.62 (92.0)	1.81 (46.0)	1.95 (49.5)						
BV□□-FRT4-05-3	1/4 Female BSPT			3.02 (76.8)	1.51 (38.4)	1.65 (41.9)						
BV□□-FRP4-05-3	1/4 Female BSPP											
BV□□-FNS4-05-3	1/4 Female NPT											
BV□□-RT4-05-3	1/4 Male BSPT			3.24 (82.2)	1.62 (41.1)	1.76 (44.6)						
Bv□□-BP4-05-3	1/4 Male BSPP											
BV□□-NS4-05-3	1/4 Male NPT											
BV□□-RT6-05-3	3/8 Male BSPT											
BV□□-BP6-05-3	3/8 Male BSPP											
BV□□-NS6-05-3	3/8 Male NPT											

Basic Ordering Number	Connection Type and Size	Orifice in. (mm)	Cv	Dimensions, in. (mm)								
	Connection 1/2/3			A	B	C	D	E	F	G	H	I
BV□□-FL8-10-3	1/2" FITOK	0.37 (9.5)	3.48	4.68 (118.8)	2.34 (59.4)	2.68 (68.1)	0.71 (18.0)	1.54 (39.0)	1.42 (36.0)	3.78 (96.0)	0.90 (22.9)	0.38 (9.7)
BV□□-FL12-10-3	3/4" FITOK			4.66(118.4)	2.33 (59.2)	2.67 (67.9)						
BV□□-ML12-10-3	12 mm FITOK											
BV□□-ML14-10-3	14 mm FITOK											
BV□□-ML16-10-3	16 mm FITOK											
BV□□-ML18-10-3	18 mm FITOK											
BV□□-ML20-10-3	20 mm FITOK			4.84 (123.0)	2.42 (61.5)	2.76 (70.2)						
BV□□-ML22-10-3	22 mm FITOK											
BV□□-FRT6-10-3	3/8 Female BSPT			3.90 (99.0)	1.95 (49.5)	2.29 (58.2)						
BV□□-FRP6-10-3	3/8 Female BSPP											
BV□□-FNS6-10-3	3/8 Female NPT											
BV□□-FRT8-10-3	1/2 Female BSPT			4.30 (109.2)	2.15 (54.6)	2.49 (63.3)						
BV□□-FRP8-10-3	1/2 Female BSPP			3.97 (101.0)	1.99 (50.5)	2.33 (59.1)						
BV□□-FNS8-10-3	1/2 Female NPT			4.30 (109.2)	2.15 (54.6)	2.49 (63.3)						
BV□□-FRT12-10-3	3/4 Female BSPT			4.50 (114.2)	2.25 (57.1)	2.59 (65.8)						
BV□□-FRP12-10-3	3/4 Female BSPP											
BV□□-FNS12-10-3	3/4 Female NPT											
BV□□-RT8-10-3	1/2 Male BSPT			4.44 (112.8)	2.22 (56.4)	2.56 (65.1)						
BV□□-BP8-10-3	1/2 Male BSPP											
BV□□-NS8-10-3	1/2 Male NPT											
BV□□-RT12-10-3	3/4 Male BSPT											
BV□□-BP12-10-3	3/4 Male BSPP											
BV□□-NS12-10-3	3/4 Male NPT											

Angle Pattern Valves

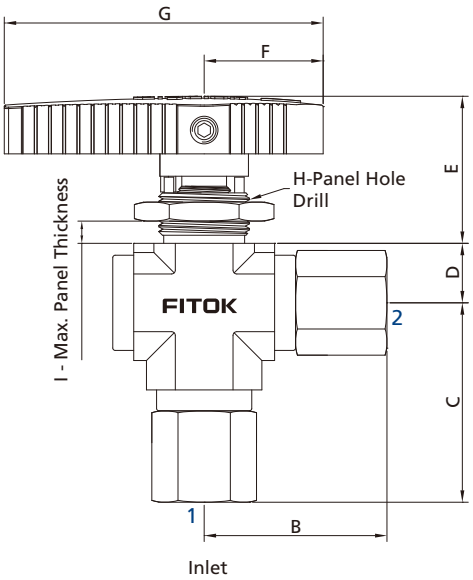

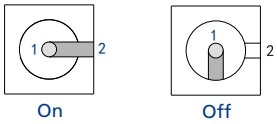

Basic Ordering Number	Connection Type and Size	Pressure Rating of End Connections @ 100°F (38°C), psig (bar)		Orifice in. (mm)	Cv	Dimensions, in. (mm)							
	Connection 1/2	316 SS	Brass			B	C	D	E	F	G	H	I
BV□□-FL1-01-A	1/16" FITOK	6000 (414)	3000 (207)	0.05 (1.3)	0.06	1.30 (33.0)	1.35 (34.3)	0.33 (8.5)	0.94 (23.9)	0.79 (20.0)	1.97 (50.0)	0.58 (14.7)	0.18 (4.6)
BV□□-FL2-02-A	1/8" FITOK	6000 (414)	3000 (207)	0.09 (2.4)	0.21	1.36 (34.5)	1.41 (35.8)						
BV□□-ML3-02-A	3 mm FITOK	6000 (414)	3000 (207)			1.37 (34.8)	1.42 (36.1)						
BV□□-FRT2-04-A	1/8 Female BSPT	6000 (414)	3000 (207)	0.12 (3.0)	0.28	1.07 (27.2)	1.12 (28.5)						
BV□□-FRP2-04-A	1/8 Female BSPP	6000 (414)	3000 (207)										
BV□□-FNS2-04-A	1/8 Female NPT	6000 (414)	3000 (207)			1.18 (30.0)	1.23 (31.3)						
BV□□-RT2-04-A	1/8 Male BSPT	6000 (414)	3000 (207)										
BV□□-BP2-04-A	1/8 Male BSPP	6000 (414)	3000 (207)										
BV□□-NS2-04-A	1/8 Male NPT	6000 (414)	3000 (207)										
BV□□-RT4-04-A	1/4 Male BSPT	6000 (414)	3000 (207)			1.35 (34.3)	1.40 (35.6)						
BV□□-BP4-04-A	1/4 Male BSPP	6000 (414)	3000 (207)										
BV□□-NS4-04-A	1/4 Male NPT	6000 (414)	3000 (207)										
BV□□-FL4-05-A	1/4" FITOK	6000 (414)	3000 (207)	0.19 (4.7)	0.70	1.74 (44.2)	1.88 (47.7)	0.48 (12.2)	1.24 (31.5)	0.59 (25.0)	2.64 (67.0)	0.77 (19.6)	0.25 (6.4)
BV□□-ML6-05-A	6 mm FITOK	6000 (414)	3000 (207)			1.75 (44.5)	1.89 (48.0)						
BV□□-FL6-05-A	3/8" FITOK	6000 (414)	2200 (152)			1.80 (45.7)	1.94 (49.2)						
BV□□-ML8-05-A	8 mm FITOK	6000 (414)	2300 (159)			1.78 (45.2)	1.92 (48.7)						
BV□□-ML10-05-A	10 mm FITOK	6000 (414)	1900 (131)			1.81 (46.0)	1.95 (49.5)						
BV□□-FRT4-05-A	1/4 Female BSPT	6000 (414)	3000 (207)			1.51 (38.4)	1.65 (41.9)						
BV□□-FRP4-05-A	1/4 Female BSPP	6000 (414)	3000 (207)										
BV□□-FNS4-05-A	1/4 Female NPT	6000 (414)	3000 (207)										
BV□□-RT4-05-A	1/4 Male BSPT	6000 (414)	3000 (207)			1.62 (41.1)	1.76 (44.6)						
Bv□□-BP4-05-A	1/4 Male BSPP	6000 (414)	3000 (207)										
BV□□-NS4-05-A	1/4 Male NPT	6000 (414)	3000 (207)										
BV□□-RT6-05-A	3/8 Male BSPT	6000 (414)	3000 (207)										
BV□□-BP6-05-A	3/8 Male BSPP	6000 (414)	3000 (207)										
BV□□-NS6-05-A	3/8 Male NPT	6000 (414)	3000 (207)										

Basic Ordering Number	Connection Type and Size	Orifice in. (mm)	Cv	Dimensions, in. (mm)							
	Connection 1/2			B	C	D	E	F	G	H	I
BV□□-FL8-10-A	1/2 " FITOK	0.37 (9.5)	3.48	2.34(59.4)	2.68(68.1)	0.71 (18.0)	1.54 (39.0)	1.42 (36.0)	3.78 (96.0)	0.90 (22.9)	0.38 (9.7)
BV□□-FL12-10-A	3/4" FITOK			2.33 (59.2)	2.67 (67.9)						
BV□□-ML12-10-A	12 mm FITOK										
BV□□-ML14-10-A	14 mm FITOK										
BV□□-ML16-10-A	16 mm FITOK										
BV□□-ML18-10-A	18 mm FITOK										
BV□□-ML20-10-A	20 mm FITOK			2.42 (61.5)	2.76 (70.2)						
BV□□-ML22-10-A	22 mm FITOK										
BV□□-FRT6-10-A	3/8 Female BSPT			1.95 (49.5)	2.29 (58.2)						
BV□□-FRP6-10-A	3/8 Female BSPP										
BV□□-FNS6-10-A	3/8 Female NPT										
BV□□-FRT8-10-A	1/2 Female BSPT			2.15 (54.6)	2.49 (63.3)						
BV□□-FRP8-10-A	1/2 Female BSPP			1.99 (50.5)	2.33 (59.1)						
BV□□-FNS8-10-A	1/2 Female NPT			2.15 (54.6)	2.49 (63.3)						
BV□□-FRT12-10-A	3/4 Female BSPT			2.25 (57.1)	2.59 (65.8)						
BV□□-FRP12-10-A	3/4 Female BSPP										
BV□□-FNS12-10-A	3/4 Female NPT										
BV□□-RT8-10-A	1/2 Male BSPT			2.22 (56.4)	2.56 (65.1)						
BV□□-BP8-10-A	1/2 Male BSPP										
BV□□-NS8-10-A	1/2 Male NPT										
BV□□-RT12-10-A	3/4 Male BSPT										
BV□□-BP12-10-A	3/4 Male BSPP										
BV□□-NS12-10-A	3/4 Male NPT										

1. FITOK means FITOK double ferrule tube fittings.
2. Sizes and types listed are standard. Other sizes and types are available upon request, please contact FITOK Group or our authorized distributors.
3. Dimensions are shown with tube fitting nuts finger-tightened. All dimensions are for reference only and are subject to change.
   For dimensions not shown above, please contact FITOK Group or our authorized distributors.

Locking Device

Locking Device 1

◎ Locks BV series 2-way or 3-way valves, featuring a locking hole diameter of 0.21 in (5.2 mm).

◎ To order a ball valve with Locking Device 1, add - **L** to the valve ordering number.
Example: BVSS-ML12-10- **L**/BVSS-ML12-10-3- **L**

Locking Device 1

Locking Device 2

◎ Locks BV series 2-way or 3-way valves, featuring different locking hole diameters:
0.21 in (5.2 mm) for valves with orifice designators 05 and 06
0.34 in (8.7 mm) for valves with orifice designator 10

◎ To order a ball valve with Locking Device 2, add - **LP** to the valve ordering number.
Example: BVSS-ML12-10-**LP**/BVSS-ML12-10-3-**LP**

◎ No impact on panel mounting.

◎ Locking device kits are also available for individual purchase to add locking functionality to your existing standard manual ball valves, with ordering information as follows:

Locking Device 2

Locking Device 2 Kits

Name	Valve Orifice	Locking Hole Diameter	Kit Ordering Number	Content
Locking Device Kits	05, 06	0.21 in (5.2 mm)	BVS4-06-LP-RK	Upper lock plate, lower lock plate
	10	0.34 in (8.7 mm)	BVS4-10-LP-RK	

Ball Valve without Handle

◎ Ball Valve without handle can be directly connected to the FITOK actuator assembly.

◎ To order, please add -**AM** to the valve ordering number.
Example: BVSS-FL4-05-**AM**

FITOK

Ordering Number Description

BVSS - FL8 - ML12 - ML10 - P06 - RXHQ3 - L - SCEF2

Series	Body Material	Connection 1 Type	Connection 1 Size	Connection 2/3 Type	Connection 2/3 Size	Seat Material	Orifice Size	Handle/ Actuator	For Actuator	Flow Pattern	Locking Device	Special Application	Cleaning and Packaging

Series

BV	

Body Material

SS	CF8M
6L	CF3M
S4	CF8
B	Brass

Connection 1 Type

FNS	Female NPT
NS	Male NPT
FRT	Female BSPT
RT	Male BSPT
FMS	Female Metric Thread (for RG-M)
MS	Male Metric Thread (for RG-M)
FRP	Female BSPP (For RP)
BP	Male BSPP (For RG)
FL	Fractional Tube Fitting
ML	Metric Tube Fitting
UFB	Rotatable Fractional Tube Butt Weld
UMB	Rotatable Metric Tube Butt Weld
UPB	Rotatable Pipe Butt Weld

Connection 1 Size

2	1/8"
3	3 mm
4	1/4"
5	5/16"
6	3/8" or 6 mm or M6 × 1
8	1/2" or 8 mm
10	10 mm or M10 × 1
12	3/4" or 12 mm
14	14 mm or M14 × 1.5
16	16 mm
18	18 mm
20	20 mm or M20 × 1.5
22	22 mm or M22 × 1.5
24	M24 × 1.5

Connection 2/3 Type / Connection 2/3 Size

	Same as Connection 1
Specified in the same way as Connection 1 type and size	

Seat Material

	PTFE
K	PCTFE
P	PEEK

Orifice Size

02	0.09" (2.4 mm)
03	0.13" (3.2 mm)
04	0.17" (4.2 mm)
05	0.19" (4.7 mm)
06	0.25" (6.4 mm)
10	0.41" (10.3 mm)

Handle/ Actuator

	Black Nylon Handle
I	Red Nylon Handle
GR	Green Nylon Handle
J	Blue Nylon Handle
Y	Yellow Nylon Handle
U	Black Aluminium Handle
AM	Without Handle
C	90° Normally Closed Pneumatic Actuator
O	90° Normally Open Pneumatic Actuator
D	90° Double Acting Pneumatic Actuator
LX	180° Left End Normally Open Pneumatic Actuator
RX	180° Right End Normally Open Pneumatic Actuator
DX	180° Double Acting Pneumatic Actuator
E	90° Electric Actuator
EX	180° Electric Actuator

For Actuator

	None
H	Mechanical Limit Switch
N	Inductive Limit Switch
Q	Solenoid Valve
HQ	Mechanical Limit Switch and Solenoid Valve
NQ	Inductive Limit Switch and Solenoid Valve

Flow Pattern

	Straight
A	Angle (Bottom Port Inlet)
3	3-Way (Diverter Valve)

Locking Device

	No
L	Locking Device 1
LP	Locking Device 2

Special Application

	None
S	NACE MR0175
CE	CE Certification

Cleaning and Packaging

	FC-01
F2	FC-02

Note: "Ordering Number Description" is a reference to understand the combination rules of FITOK product part number. Not all combinations are available.

1. Standard thread pitch for metric threads are as follows:
   M10 and below: 1 mm
   M12 to M24: 1.5 mm
   Standard thread pitch should be omitted in the ordering number, others should be specified.
2. For oxygen-enriched environment or hazardous media service, contact FITOK Group or our authorized distributors.
3. Cleaning and Packaging:
   FC-01: Standard cleaning and packaging for general industrial procedures.
   FC-02: Special cleaning and packaging for wetted system components to ensure compliance with product cleaning requirement of ASTM G93 Level C.
4. For more information about pneumatic actuator ball valves, please refer to the catalog Actuated Ball Valves.
5. SilcoNert® 2000 (Sulfinert®) Coating: Except for ball valves with PEEK seat, wetted metal components SilcoNert® 2000 (Sulfinert®) coated.
6. CE certification is available. For more information, please contact FITOK group or our authorized distributors