Atomic Layer Deposition Diaphragm Valves

ALD Series

Introduction

FITOK ALD Series Atomic Layer Deposition Diaphragm Valves are ideal for the atomic layer deposition processes. They deliver ultra-high precision, cleanliness, consistency, and long cycle life, ensuring accurate gas dosing for technological processes.

Features

◎ Ultra long cycle life
◎ No dead space in the flow path
◎ High Cv consistency and stability
◎ Quick response capable of valve opening or closing time of less than 5 ms
◎ Standard, thermal and thermal immersion models optional
◎ For the valve fitted with a solenoid valve, the solenoid valve is circularly rotatable along the actuator for easy position adjustment

Technical Data

Port Size		1/4" to 3/8", 6 mm to 8 mm, 1.125" or 1.5" surface-mount	3/8" to 1/2", 10 mm to 12 mm, or 1.5" surface-mount
Flow Coefficient (Cv) ①		Standard and thermal model: 0.27	Standard and thermal model: 0.62
		Thermal immersion model: 0.3 ②	Thermal immersion model: 0.62 ③
Orifice Size		0.16" (4.1 mm)	0.23" (5.9 mm)
Working Pressure		Standard and thermal models: Vacuum to 145 psig (10 bar)	
		Thermal immersion model: Vacuum to 70 psig (4.8 bar)	
Actuator Operating Pressure		60 ~ 90 psig (4.2 ~ 6.2 bar)	
Working Temperature	**Body**	Standard model: 32 ~ 248 °F (0 ~ 120 °C)	
		Thermal model: 32 ~ 392 °F (0 ~ 200 °C)	
		Thermal immersion model: 70 ~ 428 °F (20 ~ 220 °C)	
	Actuator	Standard and thermal models: 32 ~ 248 °F (0 ~ 120 °C)	
		Thermal immersion model: 70 ~ 428 °F (20 ~ 220 °C)	
	Solenoid Valve	-0.4 ~ 122 °F (-18 ~ 50 °C)	
	Sensor	-13 ~ 158 °F (-25 ~ 70 °C)	
Leak Rate (Helium)	**Internal**	$\leqslant 1\times10^{-9}$ std·cm³/s	$\leqslant 1\times10^{-8}$ std·cm³/s
	External	$\leqslant 1\times10^{-9}$ std·cm³/s	$\leqslant 1\times10^{-9}$ std·cm³/s

① Cv is adjustable and may vary with temperature. The value shown is the default at room temperature before shipment and can be adjusted upon customer request. For more details, please contact FITOK.
② Cv =0.21 at 428 °F (220 °C)
③ Cv =0.4 at 428 °F (220 °C)

Flow Data

Air @ 70 °F (21 °C) Water @ 60 °F (16 °C)

Orifice Size in. (mm)	Pressure Drop to Atmosphere psig (bar)	Air (l/min)	Water (l/min)
0.16 (4.1)	10 (0.68)	86	3.2
	50 (3.4)	230	7.2
	100 (6.8)	410	10.2
0.23 (5.9)	10 (0.68)	199	7.4
	50 (3.4)	530	16.6
	100 (6.8)	945	23.6

Process Specification

Item \ Process Specification	Ultra High Purity Process (FC-03)
Material	316L SS, 316L SS VAR, 316L SS VIM-VAR
Wetted Surface Roughness	Ra 5 µin. (0.13 µm)
Polishing Process	Electropolished
Cleaning	Ultra high purity cleaning in continuously monitored ultrasonic cleaning system with deionized water
Assembly Environment	ISO 4 (FS 209E 10 equivalent) cleanroom
Packaging	Double bagged in cleanroom

Notes: Refer to page P-01 for a detailed description of Process Specification.

Major Materials of Construction

Item	Component	Material/Specification
1	Actuator	Aluminum
2	Thermal Isolation Coupling Housing (Thermal Model Only)	316 SS/ASTM A479
3	Thermal Isolation Coupling Stem (Thermal Model Only)	S17400/ASTM A564
4	Guide (Thermal Model Only)	PTFE/ASTM D1710
5	Bonnet Nut	316 SS/ASTM A479
6	Bonnet	S17400/ASTM A564
7	Button	316 SS/ASTM A479
8	Diaphragm	Cobalt Alloy/AMS 5876
9	Seat	PFA/ASTM D3307
10	Body	316L SS or 316L SS VAR

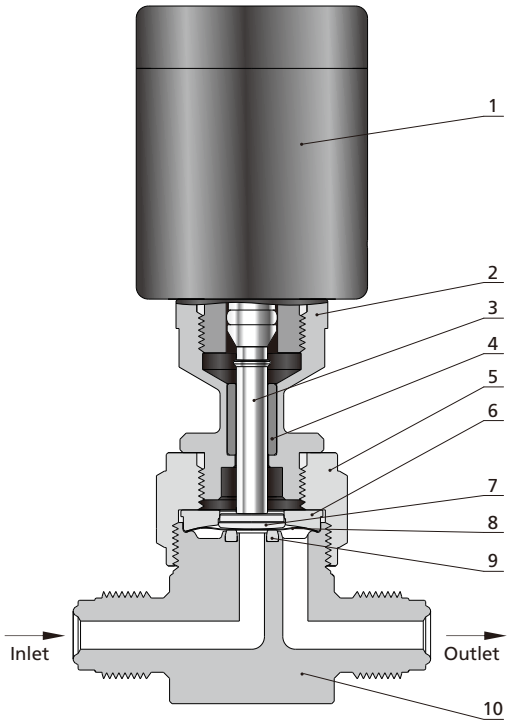

Normally Closed Thermal Actuator

Item	Component	Material/Specification
1	Fitting	316 SS/ASTM A479
2	Actuator ①	316 SS/ASTM A479
3	Bonnet Nut	316 SS/ASTM A479
4	Bonnet	S17400/ASTM A564
5	Button	316 SS/ASTM A479
6	Diaphragm	Cobalt Alloy/AMS 5876
7	Seat	PFA/ASTM D3307
8	Body	316L SS or 316L SS VAR

① 1/8" tube fittings by default.

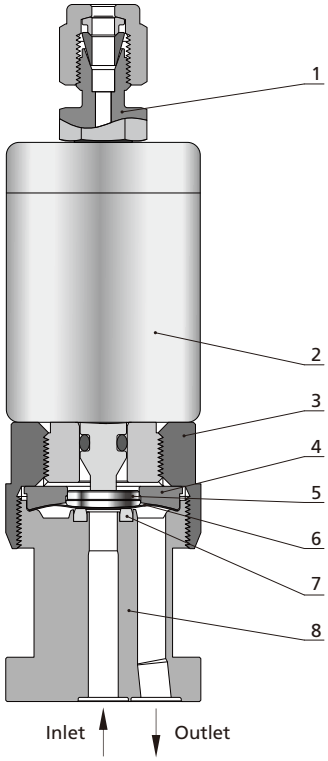

Normally Closed Thermal Immersion Actuator

Dimensions and Ordering Information

Dimensions, in inches (millimeters), are for reference only.

2-Port Valves

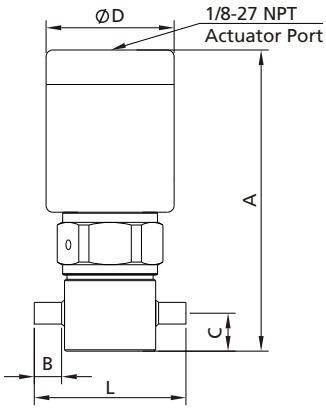

Standard Model

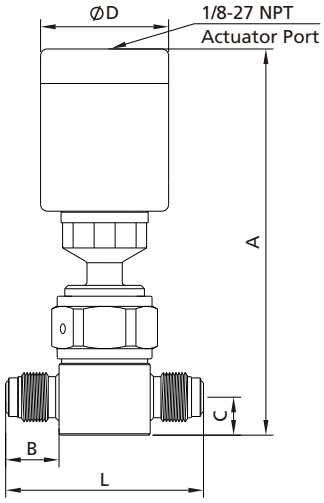

Thermal Model

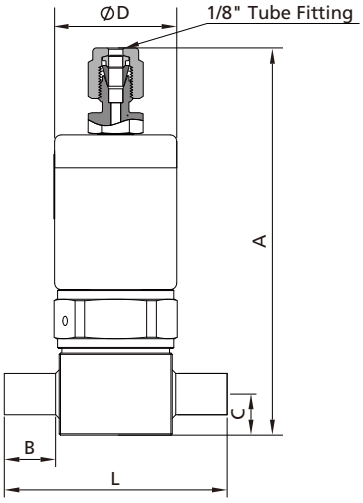

Thermal Immersion Model

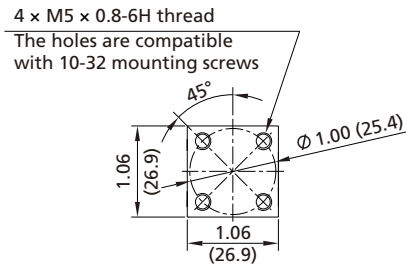

Orifice 0. 16 in. (4.1 mm) Bottom

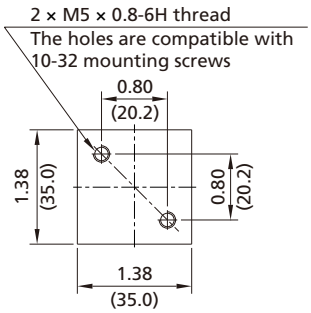

Orifice 0. 23 in. (5.9 mm) Bottom

Orifice Size in. (mm)	Valve Type	Basic Ordering Number	Connection Type and Size	Dimensions, in. (mm)				
				A	B	C	D	L
0.16 (4.1)	Standard	ALD□□-TB4-4-	1/4" Tube Butt Weld	3.50 (88.9)	0.30 (7.6)	0.44 (11.2)	1.49 (37.8)	1.74 (44.2)
		ALD□□-TB6-4-	3/8" Tube Butt Weld		0.26 (6.6)			
		ALD□□-FFR4-4-	1/4" Rotatable Female FR Fitting		0.86 (21.8)			2.78 (70.6)
		ALD□□-RFR4-4-	1/4" Rotatable Male FR Fitting					
		ALD□□-FR4-4-	1/4" Integral Male FR Fitting		0.62 (15.7)			2.30 (58.4)
	Thermal	ALD□□-TB4-4-HT-	1/4" Tube Butt Weld	4.50 (114.0)	0.30 (7.6)	0.44 (11.2)	1.49 (37.8)	1.74 (44.2)
		ALD□□-TB6-4-HT-	3/8" Tube Butt Weld		0.26 (6.6)			
		ALD□□-FFR4-4-HT-	1/4" Rotatable Female FR Fitting		0.86 (21.8)			2.78 (70.6)
		ALD□□-RFR4-4-HT-	1/4" Rotatable Male FR Fitting					
		ALD□□-FR4-4-HT-	1/4" Integral Male FR Fitting		0.62 (15.7)			2.30 (58.4)
	Thermal Immersion	ALD□□-TB4-4-HJ-	1/4" Tube Butt Weld	4.02 (102.1)	0.30 (7.6)	0.44 (11.2)	1.12 (28.5)	1.74 (44.2)
		ALD□□-TB6-4-HJ-	3/8" Tube Butt Weld		0.26 (6.6)			
		ALD□□-FFR4-4-HJ-	1/4" Rotatable Female FR Fitting		0.86 (21.8)			2.78 (70.6)
		ALD□□-RFR4-4-HJ-	1/4" Rotatable Male FR Fitting					
		ALD□□-FR4-4-HJ-	1/4" Integral Male FR Fitting		0.62 (15.7)			2.30 (58.4)
0.23 (5.9)	Standard	ALD□□-TB6-6-	3/8" Tube Butt Weld	3.55 (93)	0.67 (17.0)	0.50 (12.7)	1.49 (37.8)	2.72 (69.0)
		ALD□□-TB8-6-	1/2" Tube Butt Weld					
		ALD□□-FFR8-6-	1/2" Rotatable Female FR Fitting		0.94 (24.0)			3.27 (83.0)
		ALD□□-RFR8-6-	1/2" Rotatable Male FR Fitting					
		ALD□□-FR8-6-	1/2" Integral Male FR Fitting		0.81 (20.6)			3.00 (76.2)
		ALD□□-FHFR4-6-	1/4" Rotatable Female FR Fitting		0.71 (18.1)			2.78 (70.6)
		ALD□□-RHFR4-6-	1/4" Rotatable Male FR Fitting		0.94 (23.8)			3.23 (82)
	Thermal	ALD□□-FHFR4-6-HT-	1/4" Rotatable Female FR Fitting	4.54 (118.1)	0.71 (18.1)	0.50 (12.7)	1.49 (37.8)	2.78 (70.6)
		ALD□□-RHFR4-6-HT-	1/4" Rotatable Male FR Fitting		0.94 (23.8)			3.23 (82)
		ALD□□-TB6-6-HT-	3/8" Tube Butt Weld		0.67 (17.0)			2.72 (69.0)
		ALD□□-TB8-6-HT-	1/2" Tube Butt Weld					
		ALD□□-FFR8-6-HT-	1/2" Rotatable Female FR Fitting		0.94 (24.0)			3.27 (83.0)
		ALD□□-RFR8-6-HT-	1/2" Rotatable Male FR Fitting					4.06 (103.0)
		ALD□□-FR8-6-HT-	1/2" Integral Male FR Fitting		0.81 (20.6)			3.00 (76.2)
	Thermal Immersion	ALD□□-FHFR4-6-HJ-	1/4" Rotatable Female FR Fitting	4.45 (113.1)	0.71 (18.1)	0.50 (12.7)	1.49 (37.8)	2.78 (70.6)
		ALD□□-RHFR4-6-HJ-	1/4" Rotatable Male FR Fitting		0.94 (23.8)			3.23 (82)
		ALD□□-TB6-6-HJ-	3/8" Tube Butt Weld		0.67 (17.0)			2.72 (69.0)
		ALD□□-TB8-6-HJ-	1/2" Tube Butt Weld					
		ALD□□-FFR8-6-HJ-	1/2" Rotatable Female FR Fitting		0.94 (24.0)			3.27 (83.0)
		ALD□□-RFR8-6-HJ-	1/2" Rotatable Male FR Fitting					4.06 (103)
		ALD□□-FR8-6-HJ-	1/2" Integral Male FR Fitting		0.81 (20.6)			3.00 (76.2)

Modular Surface-Mount Valves

1.125" Surface-Mount

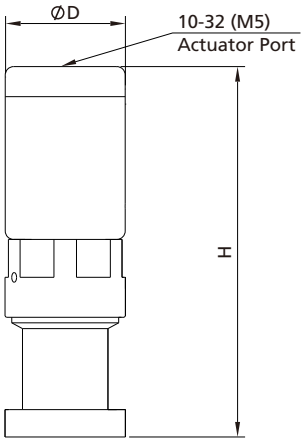

Standard Model

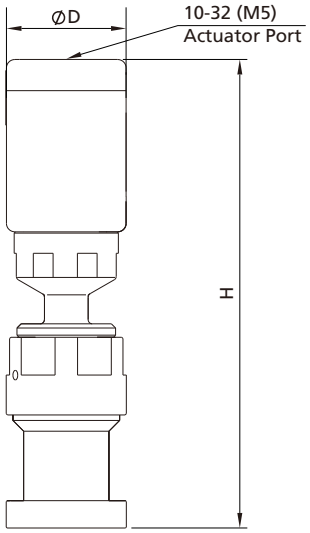

Thermal Model

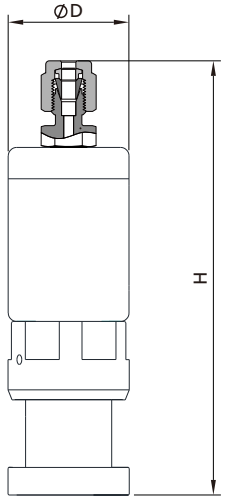

Thermal Immersion Model

1.5" Surface-Mount

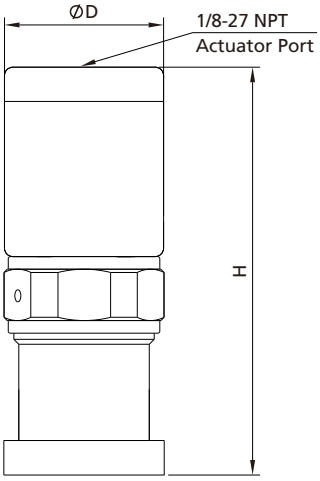

Standard Model

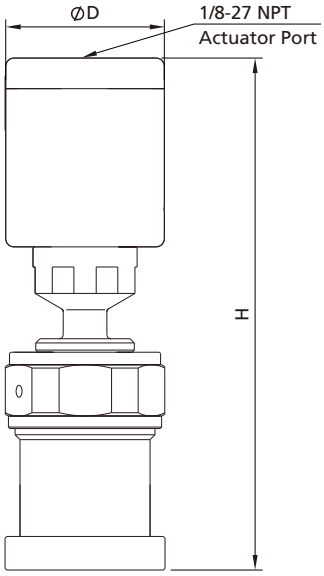

Thermal Model

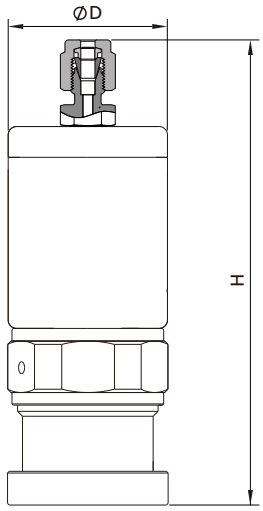

Thermal Immersion Model

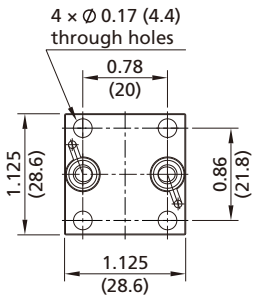

1.125" W-Seal Bottom

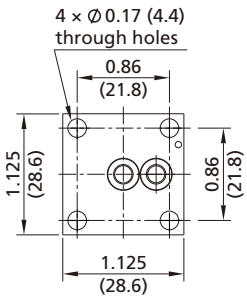

1.125" C-Seal Bottom

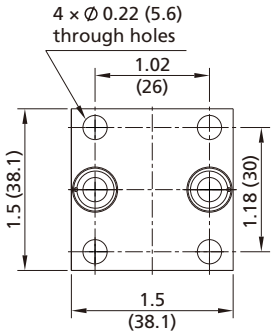

1.5" W-Seal Bottom

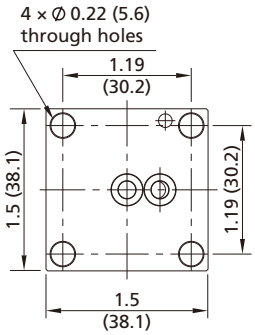

1.5" C-Seal Bottom

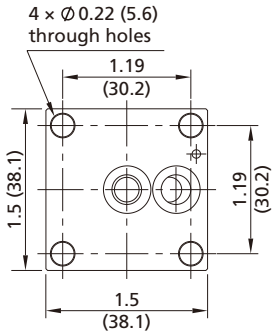

1.5" -HF C-Seal Bottom

Orifice Size in. (mm)	Valve Type	Basic Ordering Number	Connection Type and Size	Dimension, in. (mm)	
				H	∅D
0.16 (4.1)	Standard	ALD□□-WS11-4-	1.125" W-Seal	3.40 (86.4)	1.12 (28.5)
		ALD□□-CS11-4-	1.125" C-Seal		
		ALD□□-CS15-4-	1.5" C-Seal	2.9 (73.6)	
	Thermal	ALD□□-WS11-4-HT-	1.125" W-Seal	4.39 (111.5)	
		ALD□□-CS11-4-HT-	1.125" C-Seal		
		ALD□□-CS15-4-HT-	1.5" C-Seal	3.89 (98.7)	
	Thermal Immersion	ALD□□-WS11-4-HJ-	1.125" W-Seal	4.02 (102)	
		ALD□□-CS11-4-HJ-	1.125" C-Seal		
		ALD□□-CS15-4-HJ-	1.5" C-Seal	3.69 (93.7)	
0.23 (5.9)	Standard	ALD□□-WS15-6-	1.5" W-Seal	3.81 (96.9)	1.49 (37.8)
		ALD□□-CS15-6-	1.5" C-Seal		
		ALD□□-CS15-HF-6-	1.5" C-Seal (High Flow)		
	Thermal	ALD□□-WS15-6-HT-	1.5" W-Seal	4.80 (122.0)	
		ALD□□-CS15-6-HT-	1.5" C-Seal		
		ALD□□-CS15-HF-6-HT-	1.5" C-Seal (High Flow)		
	Thermal Immersion	ALD□□-WS15-6-HJ-	1.5" W-Seal	3.81 (117)	
		ALD□□-CS15-6-HJ-	1.5" C-Seal		
		ALD□□-CS15-HF-6-HJ-	1.5" C-Seal (High Flow)	3.54 (110)	

Options and Accessories

Position sensors and solenoid valves are optional. Valve bodies can be equipped with heater cartridge and thermocouple holes.

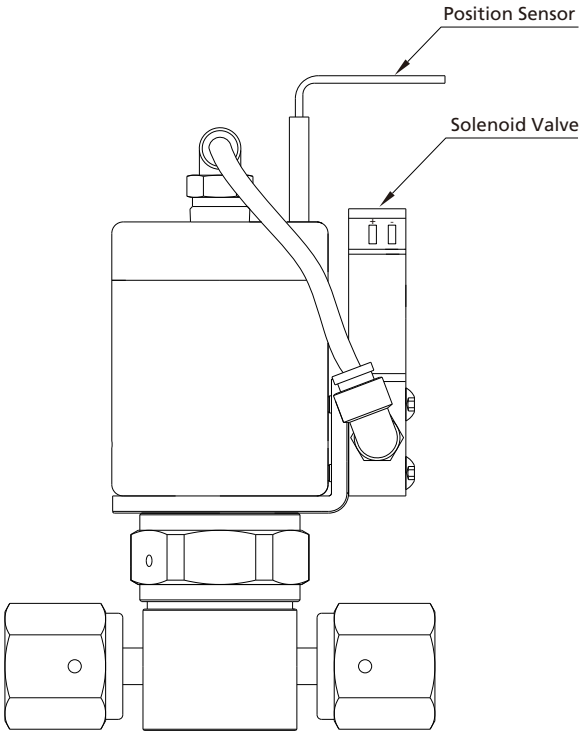

Normally Closed Standard Actuator

Position Sensors

Transmit a signal to an electrical device indicating the open and closed position of pneumatically actuated valves

Technical Information

Output	3-wire V (dc), PNP
Output Function	Normally open or normally closed
Voltage	10 ~ 30 V (dc)
Operating Temperature	-13 ~ 158 °F (-25 ~ 70 °C)
Standard Sensor	Grey cable with a diameter of 3.3 mm and a length of 2 m

Wiring Diagram

Normally Open Position Sensor

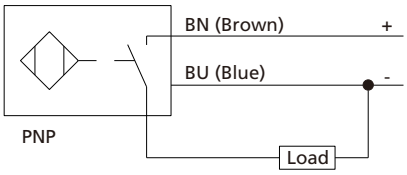

Normally Closed Position Sensor

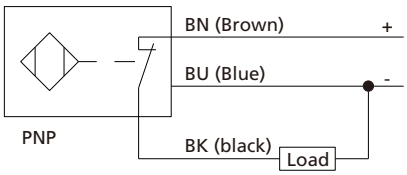

Note:
1. For normally closed pneumatic actuator valves, when fitted with normally open sensors, the sensors transmit signals with indicators illuminated when the valves are open. Conversely, when fitted with normally closed sensors, the sensors transmit signals with indicators illuminated when the valves are closed.
2. For normally open pneumatic actuator valves, when fitted with normally open sensors, the sensors transmit signals with indicators illuminated when the valves are open. Conversely, when fitted with normally closed sensors, the sensors transmit signals with indicators illuminated when the valves are closed.

Explosion-proof Position Sensors

Transmit a signal to an electrical device, indicating the open and closed positions of pneumatically actuated valves.

Equipment Group II under ATEX Certification. The output complies with DIN EN 6094 7-5-6 (NAMUR) and the sensor should be used with an isolation amplifier.

Technical Information

Output	2 Wires DC
Voltage	8.2 V (dc)
Working Temperatre	-13 ~ 158 °F (-25 ~ 70 °C)
Explosion-Proof Sensor	Blue cable with a diameter of 3.0 mm and a length of 2 m

Wiring Diagram

Normally Open Position Sensor

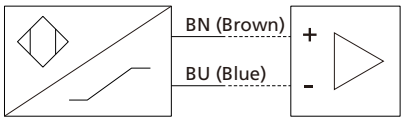

Solenoid Valve Assemblies

With fast-acting and high-flow features, the solenoid valve reduces overall response time. The solenoid valve assembly includes tubing, fittings, and a rotatable mounting bracket, offering flexibility for adjusting the solenoid valve position.

Technical Information

Solenoid Valve	**Voltage/Power**	24 V (dc)/4.0 W
	Electrical Connection	Black cable with a diameter of 1.6 mm and a length of 0.45 m
	Temperature Range	-0.4 ~ 122 °F (-18 ~ 50 °C)
	Port	M5 × 0.8-6H thread, compatible with 10-32 screws
Fitting	**Material**	316 SS
Tubing		Polyurethane
Bracket		304 SS
O-Ring		Fluorocarbon FKM

Pneumatic Fittings

The pneumatic fitting connects the gas source (via tubing or hose) to a pneumatic actuator, ensuring a reliable gas supply for efficient operation.

Technical Information

Code	EM4	UM4
Description	90° union elbow for 4 mm tube	Straight fitting for 4 mm tube
Major Materials	316 SS, FKM	
Max. Working Pressure	1 MPa	
Working Temperature	23 ~ 302 °F (-5 ~ 150 °C)	

Note: For additional pneumatic fitting options, please contact FITOK.

Heater Cartridge and Thermocouple Insertion Hole

Heater cartridges holes: 2-port and 3-port modular surface-mounted valves have 1 Hole, while other 2-port valves feature 2 Holes.
Thermocouple Insertion Hole: 2-port and 3-port valves have 1 Thermocouple Insertion Hole and 1 Thermocouple Securing Port.

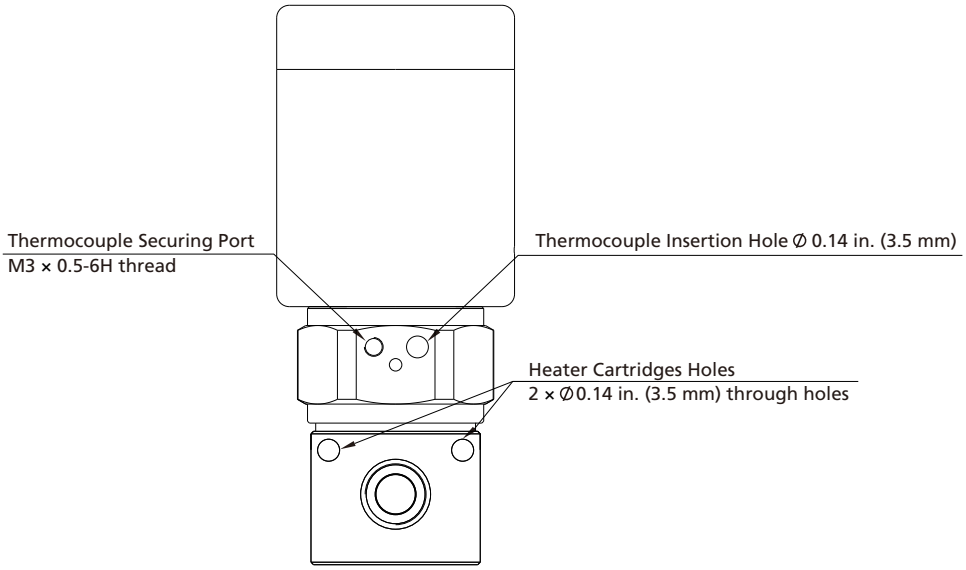

Normally Closed Standard Actuator

Part Number Description

ALD6LV - CS11 - 4 - HT - 3P - CF3MOVBCEM4 - CE

Body Material	
6L	316L SS
6LV	316L SS VAR
6LW	316L SS VIM-VAR

Port Size	
4	1/4"
6	3/8" or 6 mm
8	1/2" or 8 mm
10	10 mm
12	12 mm
11	1.125"
15	1.5"
15-HF	1.5" High Flow

Orifice Size	
4	0.16" (4.1 mm)
6	0.23" (5.9 mm)

Valve Type	
	Standard
HT	Thermal
HJ	Thermal Immersion

Port Type	
TB	Fractional Tube Butt Weld
MTB	Metric Tube Butt Weld
FR	Integral Male FR Fitting
FFR	Rotatable Female FR Fitting
RFR	Rotatable Male FR Fitting
FHFR	High Flow Rotatable Female FR Fitting
RHFR	High Flow Rotatable Male FR Fitting
WS	W-Seal
CS	C-Seal

Ports	
	2-Port
3P	3-Port

Note: 3P applies only to valves with W/C sealed ports.

Actuator Type	
C	Normally Closed
O	Normally Open

Process Specification	
F3	FC-03

Position Sensor	
	None
MO	Normally Open Position Sensor
MC	Normally Closed Position Sensor

Accessory	
	None
V	Solenoid Valve Assembly

Heater Cartridge Holes and Thermocouple Holes	
	None
BC	Heater Cartridge Holes and Thermocouple Holes

Pneumatic Fittings	
	1/8" tube fittings (Only for Thermal Immersion Valves)
EM4	90° union elbow for 4 mm tube
UM4	Straight fitting for 4 mm tube

Product Certification	
	None
CE	CE Certification
AX	ATEX Certification

Notes:
1. "Ordering Number Description" is a reference to understand the combination rules of FITOK product part number. Not all combinations are available, Should you have any questions, please contact FITOK Group or our authorized distributors.
2. For the –CE or AX options, the valve conforms to ATEX certification, with "CE" marking and explosion protection "EX" marking. For position sensor selections, the -CE option includes a 3-wire position sensor compliant with CE certification, while the –AX option includes a 2-wire explosion-proof position sensor compliant with ATEX certification. The 2-wire explosion-proof position sensor requires use with an isolating switch amplifier.